CONFIDENTIAL & PROPRIETARY
All data contained in this document is sole property of **DRY SYSTEMS TECHNOLOGIES** and is considered confidential and proprietary.
This document may not be reproduced, released to third parties, or used for purposes other than for which it was furnished, without express written consent of **DRY SYSTEMS TECHNOLOGIES** .
This document remains property of **DRY SYSTEMS TECHNOLOGIES** and must be returned upon request.

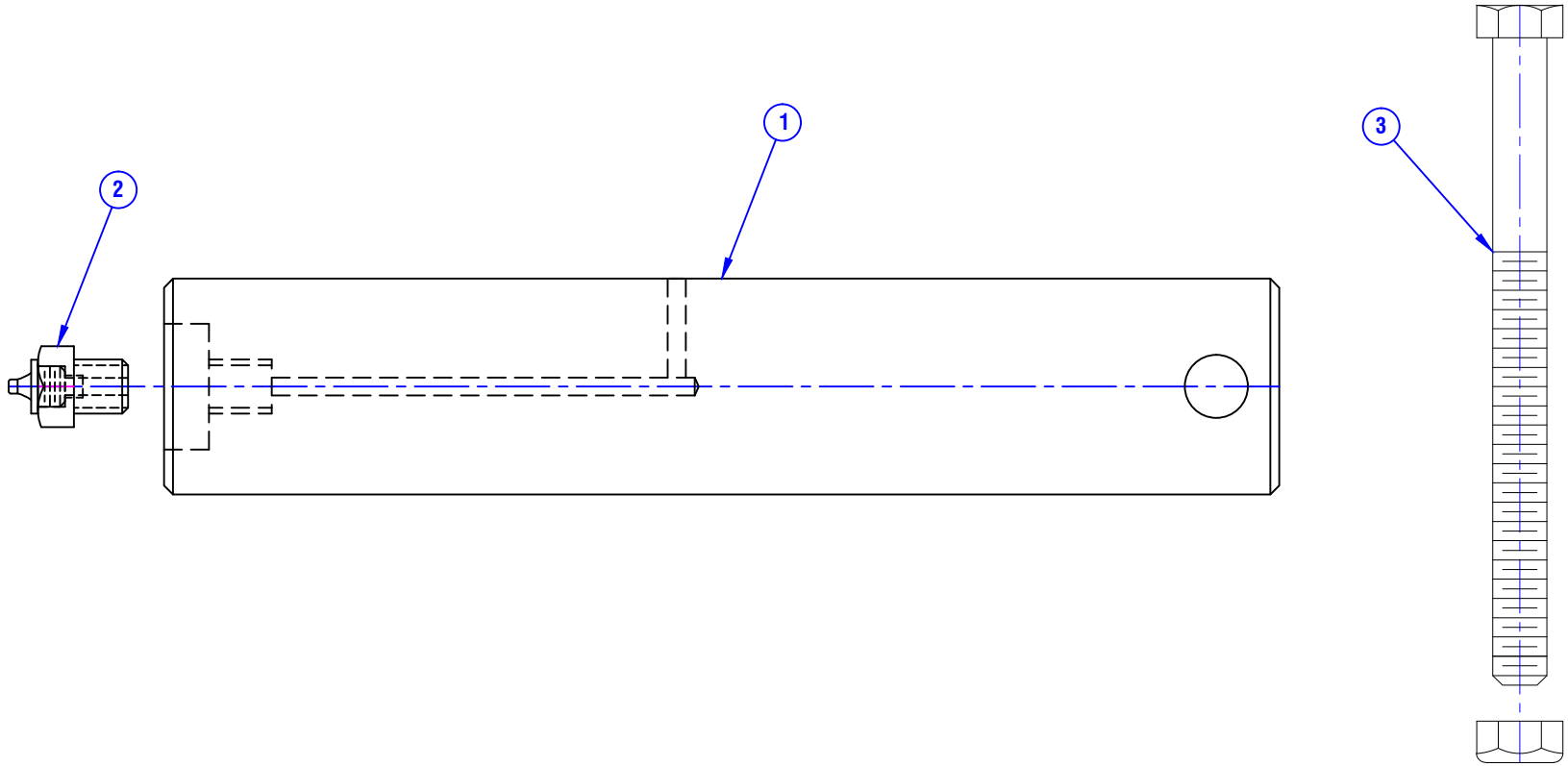

ITEM	PART NO.	QTY.	DESCRIPTION
1	M363-205-01	2	PIN, CYLINDER, BASE END
2	M363-205-02	2	GREASE BOLT
3	M515-500-26	2	PIN KEEPER BOLT - 3/4 -10 X 6 GR 8 HHCS
	M515-560-04	2	3/4 - 10 TOP LOCK NUT

TOLERANCES
Linear unless noted
Machined: ±0.005
Fabricated: ±0.02
Angular: ±1/2°
Surface finish 125

REV	DATE	NAME	DESCRIPTION

DRY SYSTEMS TECHNOLOGIES
10420 RISING COURT
WOODRIDGE, IL 60517
Phone: 630-427-2051 Fax: 630-427-1036
E-Mail: eng@drysystemstech.com

DESCRIPTION: PIN, CYLINDER BASE END ASSEMBLY		NO REQ'D: 2
SCALE: Full	DATE: Oct 01 2019	DRAWN BY: W Fox
MATERIAL		APPROVED BY
DRAWING NO: **SECTION 1-10**		