All data contained in this document is sole property of **DRY SYSTEMS TECHNOLOGIES** and is considered confidential and proprietary.
This document may not be reproduced, released to third parties, or used for purposes other than for which it was furnished, without express written consent of **DRY SYSTEMS TECHNOLOGIES**.
This document remains property of **DRY SYSTEMS TECHNOLOGIES** and must be returned upon request.

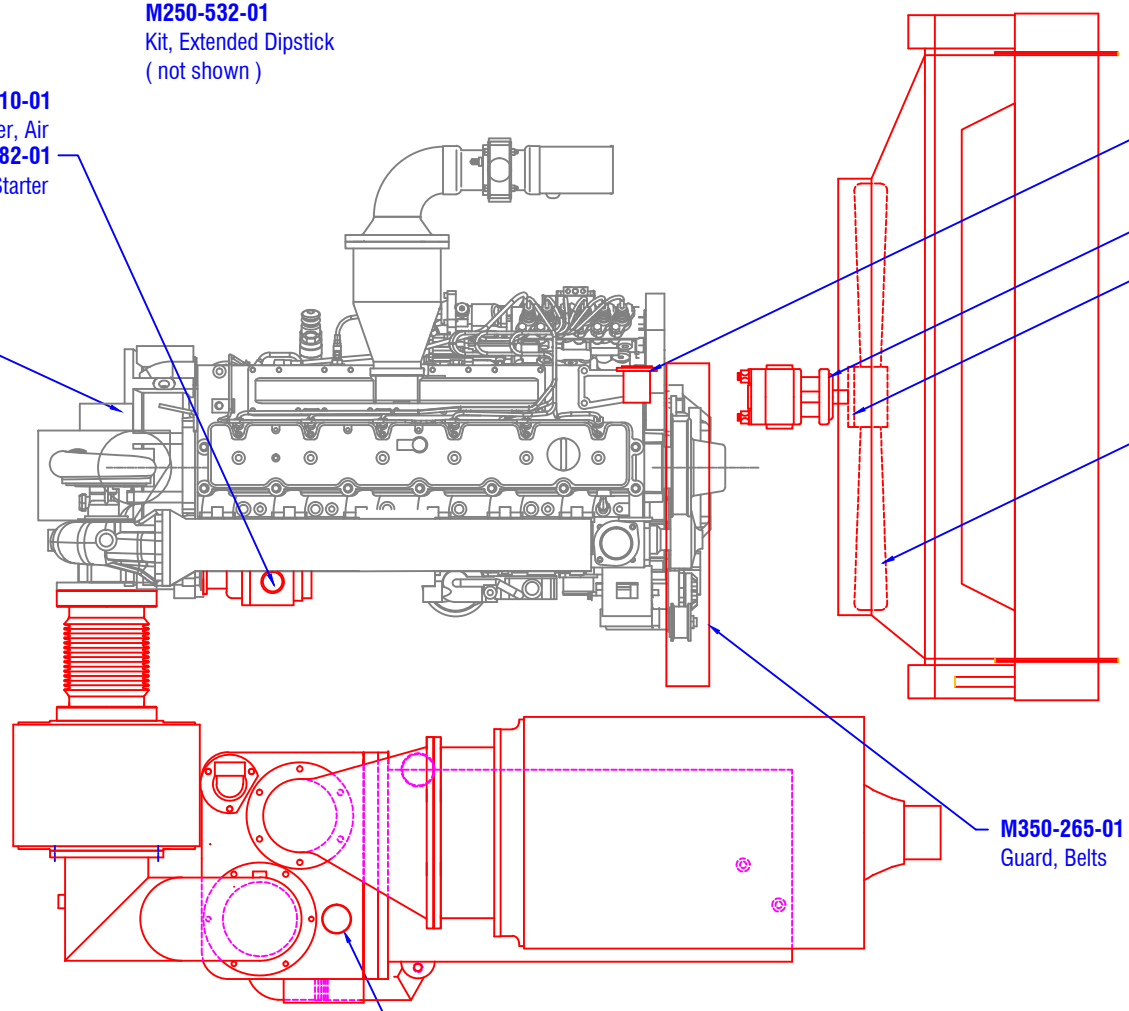

TOLERANCES
Linear unless noted
Machined: ±0.005
Fabricated: ±0.01
Angular: ±1/2°
Surface finish 125

REV	DATE	NAME	DESCRIPTION

DRY SYSTEMS TECHNOLOGIES
10420 RISING COURT
WOODRIDGE, IL 60517
Phone: 630-427-2051 Fax: 630-427-1036
E-Mail: eng@drysystemstech.com

DESCRIPTION: **DST TOPVIEW**
NO REQ'D
SCALE: FULL
DATE: Sept 18 2018
DRAWN BY: Ward Fox
MATERIAL:
APPROVED BY:
DRAWING NO: **SECTION 2-05**