All data contained in this document is sole property of **DRY SYSTEMS TECHNOLOGIES** and is considered confidential and proprietary.
This document may not be reproduced, released to third parties, or used for purposes other than for which it was furnished, without express written consent of **DRY SYSTEMS TECHNOLOGIES** .
This document remains property of **DRY SYSTEMS TECHNOLOGIES** and must be returned upon request.

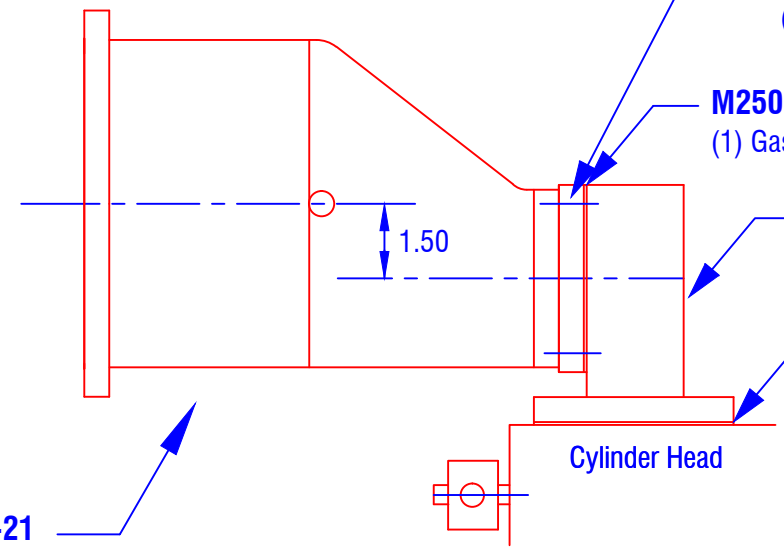

(4) Hex Head Screw
M8 x 25 mm
(4) Lock Washer, M8
Alternate:
Stud M8 x 50 (93275A030)
(4) Lock Washer, M8
(4) Nut, M8

M250-273-01
(1) Gasket

Cummins Intake Manifold
Cummins hardware

M250-291-01
(1) Gasket

M250-555-11
(1) New Style
Safety Shutdown Ass'y
*Bolts to Flange

M250-282-21
Flame Arrestor & Intake
Assembly

M40-596-01
(1) Flameproof
Port for relocation
of boost pressure
sense line

NOTE:
Fuel lines support bracket
must be removed from
Intake manifold

Cummins 8.3 Reverse Turbo

TOLERANCES	REV	DATE	NAME	DESCRIPTION
Linear unless noted				
Machined: ±0.005				
Fabricated: ±0.01				
Angular: ±1/2°				
Surface finish 125				

DRY SYSTEMS TECHNOLOGIES
8102 LEMONT ROAD, SUITE 700
WOODRIDGE, IL 60517
Phone: 630-427-2051 Fax: 630-427-1036
E-Mail: eng@drysystemstech.com

DESCRIPTION	NO REQ'D
INTAKE ASS'Y	**ONE**

SCALE	DATE	DRAWN BY
FULL	5/23/19	JLW

MATERIAL	APPROVED BY
See Detail Drawings	

DRAWING NO **Section 2-07**