CONFIDENTIAL & PROPRIETARY
All data contained in this document is sole property of **DRY SYSTEMS TECHNOLOGIES** and is considered confidential and proprietary.
This document may not be reproduced, released to third parties, or used for purposes other than for which it was furnished, without express written consent of **DRY SYSTEMS TECHNOLOGIES** .
This document remains property of **DRY SYSTEMS TECHNOLOGIES** and must be returned upon request.

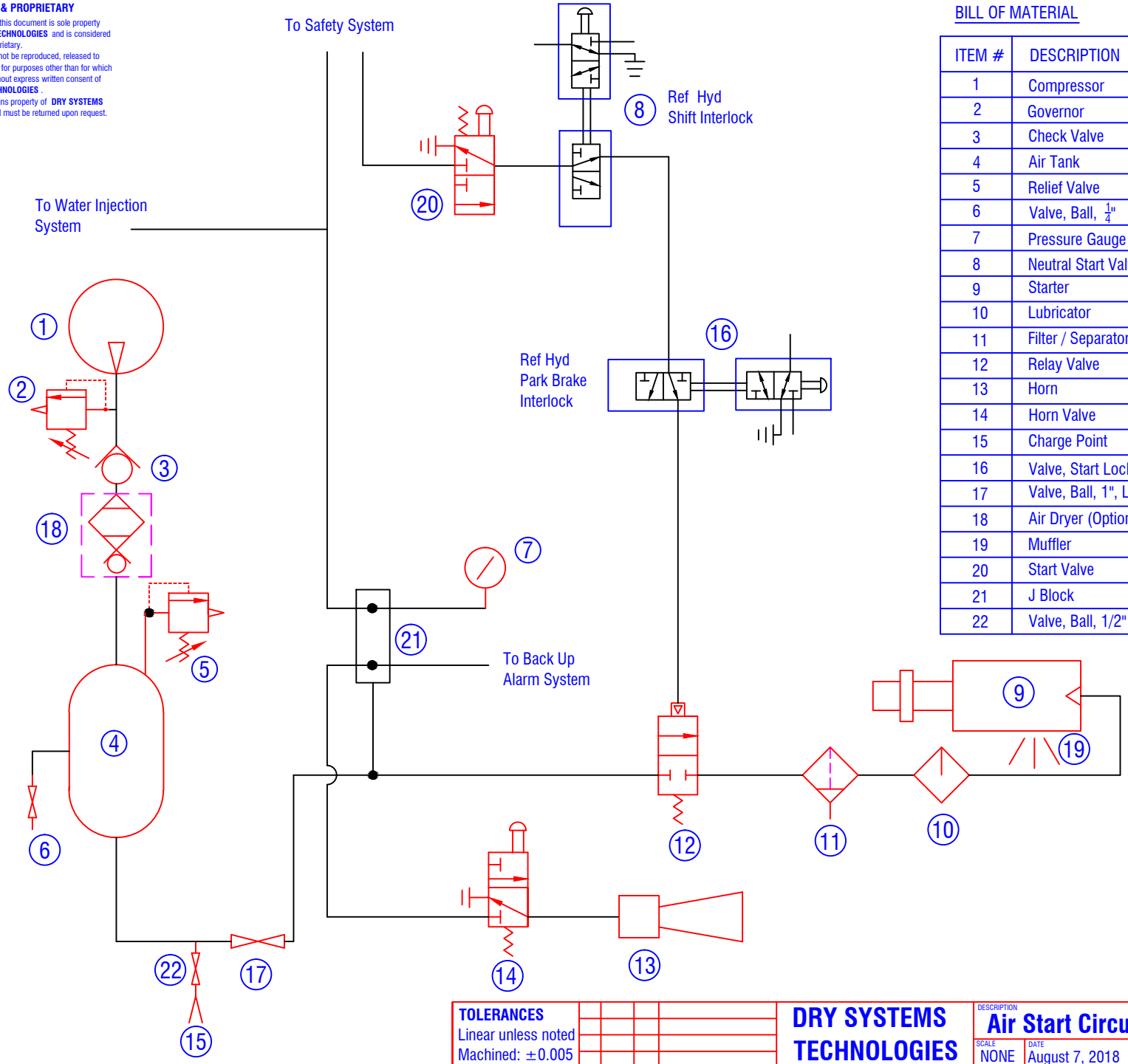

BILL OF MATERIAL

ITEM #	DESCRIPTION	
1	Compressor	M150-597-01
2	Governor	M350-576-01
3	Check Valve	M350-577-01
4	Air Tank	M350-514-01
5	Relief Valve	M350-517-01
6	Valve, Ball, $\frac{1}{4}$"	M350-573-01
7	Pressure Gauge	M350-886-01
8	Neutral Start Valve	M387-631-01
9	Starter	M354-523-01
10	Lubricator	M150-516-01
11	Filter / Separator	M150-517-01
12	Relay Valve	M150-515-01
13	Horn	M350-571-01
14	Horn Valve	M350-589-01
15	Charge Point	M350-574-01
16	Valve, Start Lock	M387-631-01
17	Valve, Ball, 1", Locking	M350-575-02
18	Air Dryer (Optional)	
19	Muffler	M354-523-02
20	Start Valve	M30-558-01
21	J Block	M350-621-01
22	Valve, Ball, 1/2"	M350-579-01

TOLERANCES
Linear unless noted
Machined: ±0.005
Fabricated: ±0.02
Angular: ±1/2°
Surface finish 125

REV	DATE	NAME	DESCRIPTION

DRY SYSTEMS TECHNOLOGIES
10420 RISING COURT
WOODRIDGE, IL 60517
Phone: 630-427-2051 Fax: 630-427-1036
E-Mail: eng@drysystemstech.com

DESCRIPTION: **Air Start Circuit**
NO REQ'D
SCALE: NONE
DATE: August 7, 2018
DRAWN BY: R Gibbs
MATERIAL
APPROVED BY
DRAWING NO: **M387-004-02**