CONFIDENTIAL & PROPRIETARY
All data contained in this document is sole property of **DRY SYSTEMS TECHNOLOGIES** and is considered confidential and proprietary.
This document may not be reproduced, released to third parties, or used for purposes other than for which it was furnished, without express written consent of **DRY SYSTEMS TECHNOLOGIES** .
This document remains property of **DRY SYSTEMS TECHNOLOGIES** and must be returned upon request.

M365-210-01
FRONT FRAME

M365-240-01
BOOM

M365-250-01
QUICK ATTACH

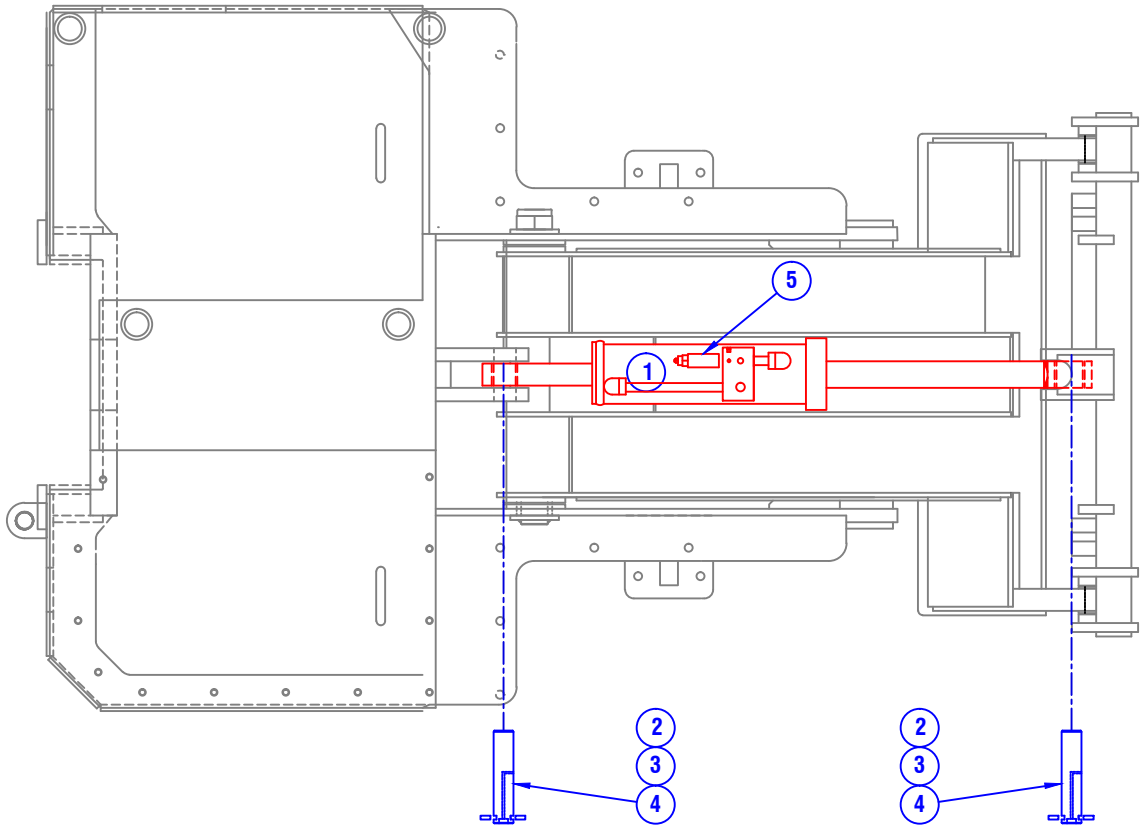

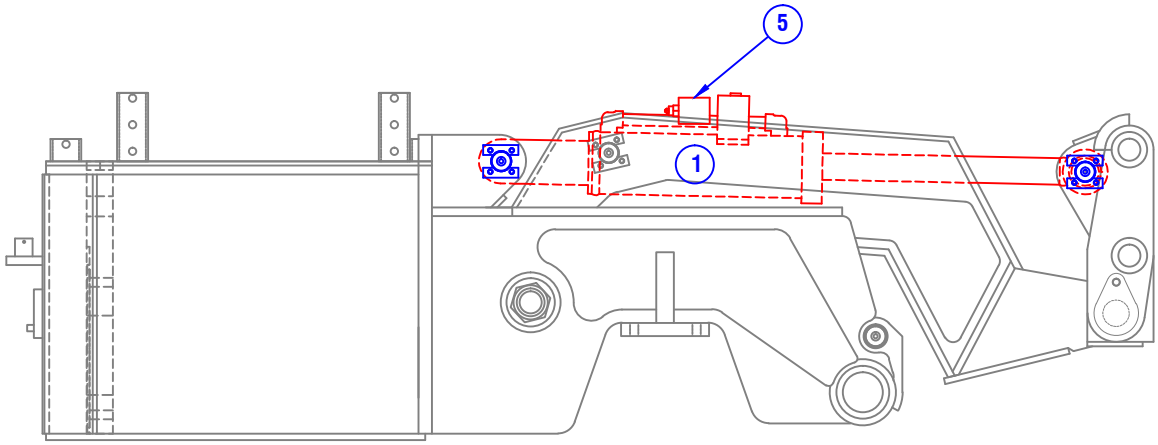

ITEM	PART NO.	QTY.	DESCRIPTION
1	M192-507-10	1	CYLINDER, TILT
2	M192-214-01	2	PIN, TILT CYL TO QA with LOCKS
3	M509-528-01	8	HEX HEAD CAP SCREW, 1/2-13 X 1 GR8
4	M600-110-01	8	LOCK WASHER, 1/2
5	M350-569-02	1	LOAD CHECK VALVE

TOLERANCES
Linear unless noted
Machined: ±0.005
Fabricated: ±0.02
Angular: ±1/2°
Surface finish 125

REV	DATE	NAME	DESCRIPTION

DRY SYSTEMS TECHNOLOGIES
10420 RISING COURT
WOODRIDGE, IL 60517
Phone: 630-427-2051 Fax: 630-427-1036
E-Mail: eng@drysystemstech.com

DESCRIPTION: TILT CYLINDER INSTALLATION
NO REQ'D: 1
SCALE: Full
DATE: June 21 2018
DRAWN BY: W Fox
MATERIAL:
APPROVED BY:
DRAWING NO: **SECTION 5-19**