DRY SYSTEMS TECHNOLOGIES®

Technology for a cleaner environment

PEABODY ENERGY

DST 35S OUTBY DIESEL SCOOP

MACHINE SERIAL #M600016

1430 US HIGHWAY 45 N, VIENNA, ILLINOIS, 62995 PHONE 618-658-3000 FAX 618-658-3002
www.drysystemstech.com

.

Index for DST 35S OUTBY SCOOP M600016–

MACHINE TAGS

DST PARTS DRAWINGS –
- M230-001-01 COOLING DIAGRAM
- M277-006-03 WATER INJECTION SYSTEM – 12V
- M347-001-01 HYDRAULIC DIAGRAM - BRAKES
- M347-002-01 ELECTRIC DIAGRAM
- M350-001-04 HYDRAULIC DIAGRAM - STEERING
- M350-008-06 HYDRAULIC DIAGRAM – BOOM
- M350-009-03 HYDRAULIC DRAWING – BRAKE COOLING
- M350-104-04 MACHINE COMPONENTS DRAWING

DST OUTBY PACKAGE PARTS
- M500846

DST OPERATION AND MAINTENANCE INDEX –
- M301-016-11 ON BOARD CLEANING SYSTEM FOR OUTBY MACHINE
- M301-018-01 CO SAMPLING PROCEDURE
- M301-019-01 PRE-OP INSPECTIONS
- M301-021-01 COOLING SYSTEM FILLING PROCEDURE

AXLE SERVICE MANUAL

FILTER LIST

MACHINE OILS

CUMMINS ENGINE FAULT CODES

Dry Systems Technologies

www.drysystemstech.com

Equipment Type 35S DIESEL SCOOP

Equipment Serial # M 600016

Engine Model QSB 6.7

Engine Serial # 73433219

CFM Requirement 9500


Dry Systems
Technologies
THIS CANOPY IS CERTIFIED TO COMPLY
WITH THE MINIMUM REQUIREMENTS
SET FORTH IN 30CFR, 75.1710-1(d)
MACHINE S/N

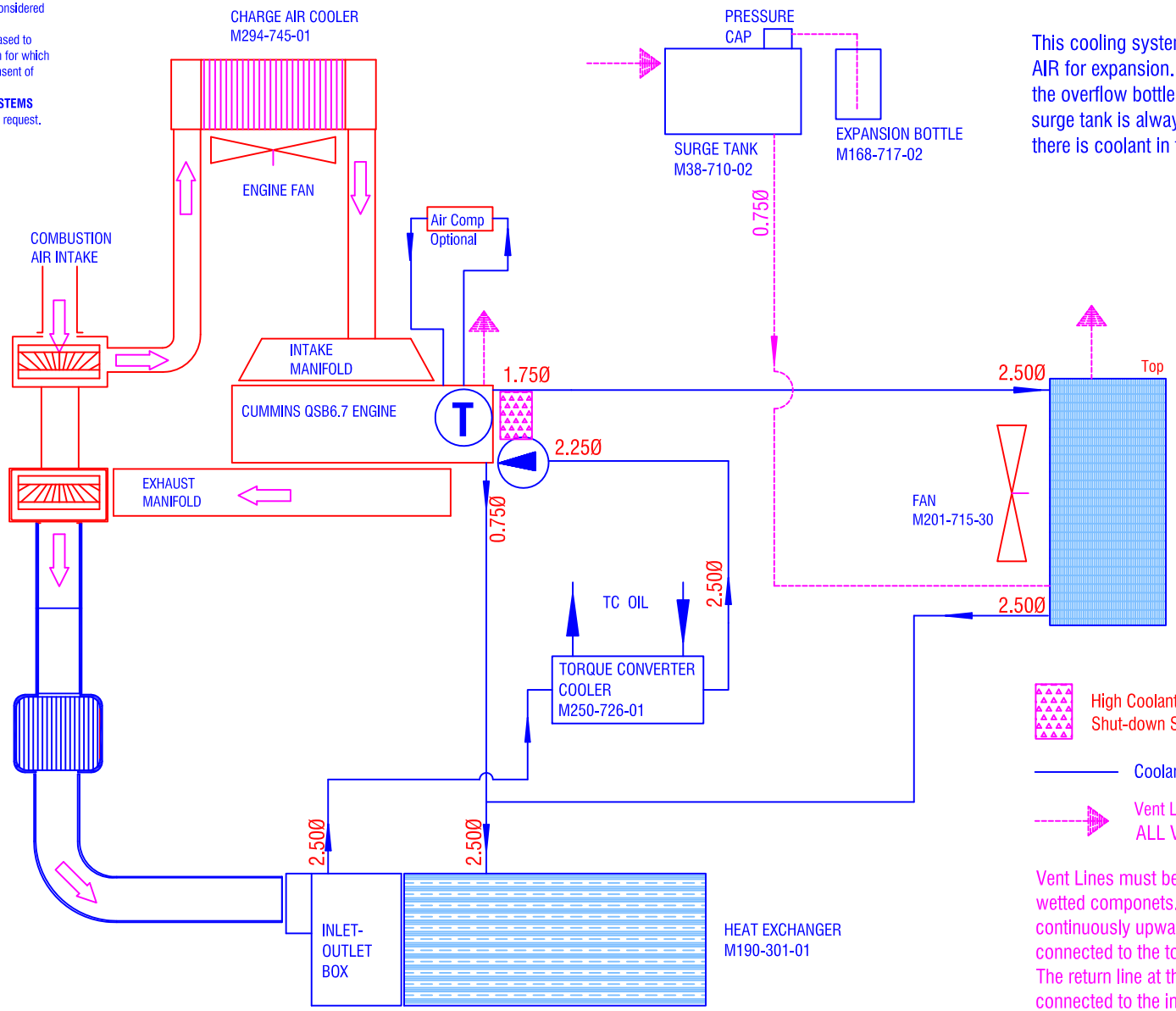

This cooling system is designed to contain NO AIR for expansion. Expansion is taken up by the overflow bottle. It is important that the surge tank is always completely filled and that there is coolant in the overflow bottle.

High Coolant Temperature
Shut-down Sensor (Set: 237° F Cummins)

Coolant Lines

Vent Lines connected to top of Surge Tank
ALL VENT LINES ARE 0.38"Ø (9.5 mm) INSIDE

Vent Lines must be fitted to all high points of all wetted componets. All Vent Lines must slope continuously upwards and the other end connected to the top inlet port in the surge tank. The return line at the bottom of the surge tank is connected to the inlet line of the water pump. This arrangement is critical to prevent build-up of steam- or air-bubbles in the system and to aid de-aeration.

200 Hp Cummins 6.7 Turbo

TOLERANCES
Linear unless noted
Machined: ±0.005
Fabricated: ±0.01
Angular: ±1/2°
Surface finish 125

REV	DATE	NAME	DESCRIPTION

DRY SYSTEMS TECHNOLOGIES
10420 RISING COURT
WOODRIDGE, IL 60517
Phone: 630-427-2051 Fax: 630-427-1036
E-Mail: eng@drysystemstech.com

DESCRIPTION: **COOLING SYSTEM**
NO REQD
SCALE: FULL
DATE: Feb 16, 2012
DRAWN BY: R Gibbs
MATERIAL
APPROVED BY
DRAWING NO: **M230-001-01**

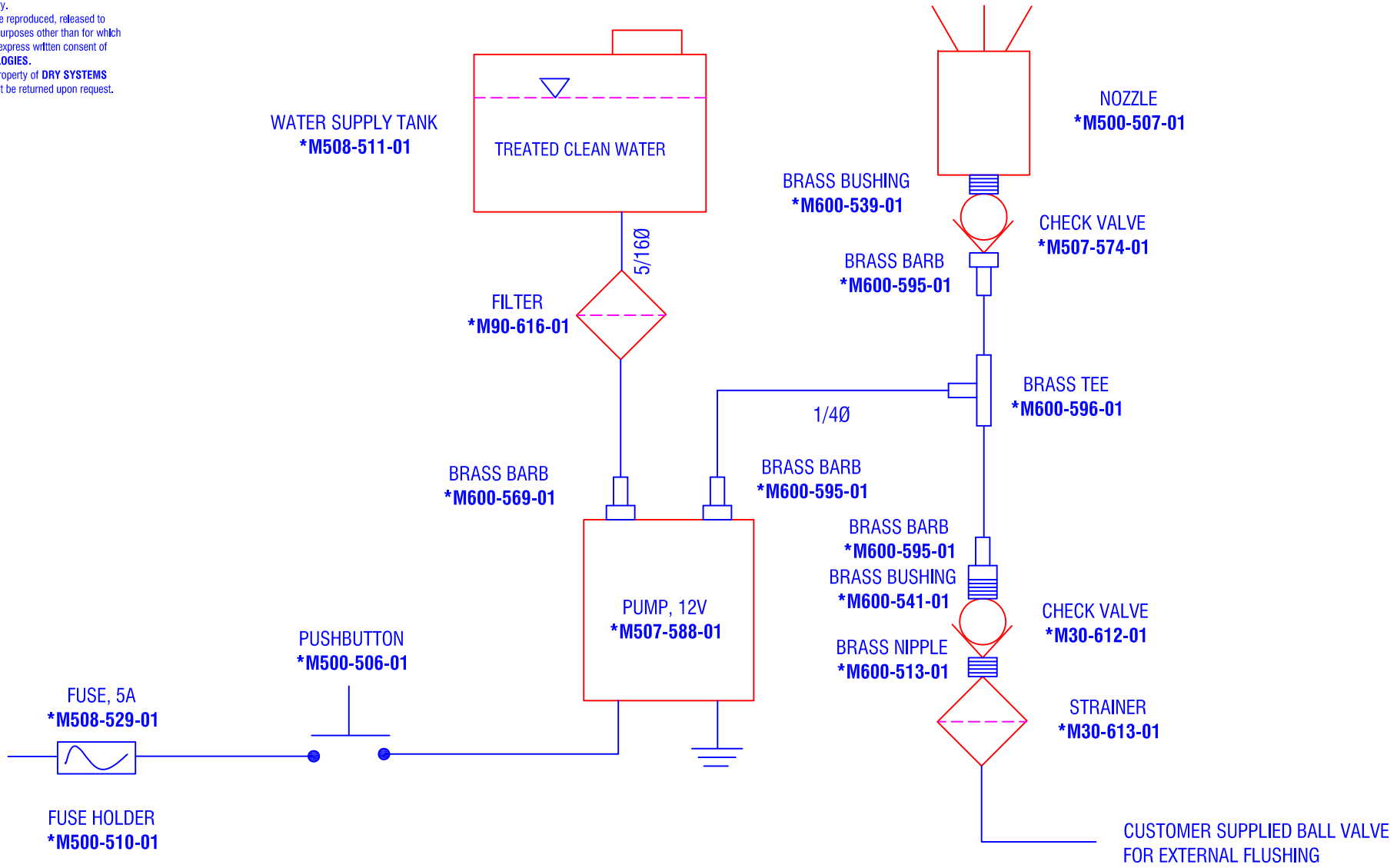

WATER INJECTION SYSTEM (12V)
KIT NO. **M507-573-01**
*** - INCLUDED IN KIT**

TOLERANCES
Linear unless noted
Machined: ±0.005
Fabricated: ±0.01
Angular: ±1/2°
Surface finish 125

REV	DATE	NAME	DESCRIPTION

DRY SYSTEMS TECHNOLOGIES
10420 RISING COURT
WOODRIDGE, IL 60517
Phone: 630-427-2051 Fax: 630-427-1036
E-Mail: eng@drysystemstech.com

DESCRIPTION: WATER INJECTION SYSTEM, 12V			NO REQ'D
SCALE: FULL	DATE: Sept 6, 2011	DRAWN BY: R Gibbs	
MATERIAL: See Detail Drawings		APPROVED BY	
DRAWING NO: **M277-006-03**			

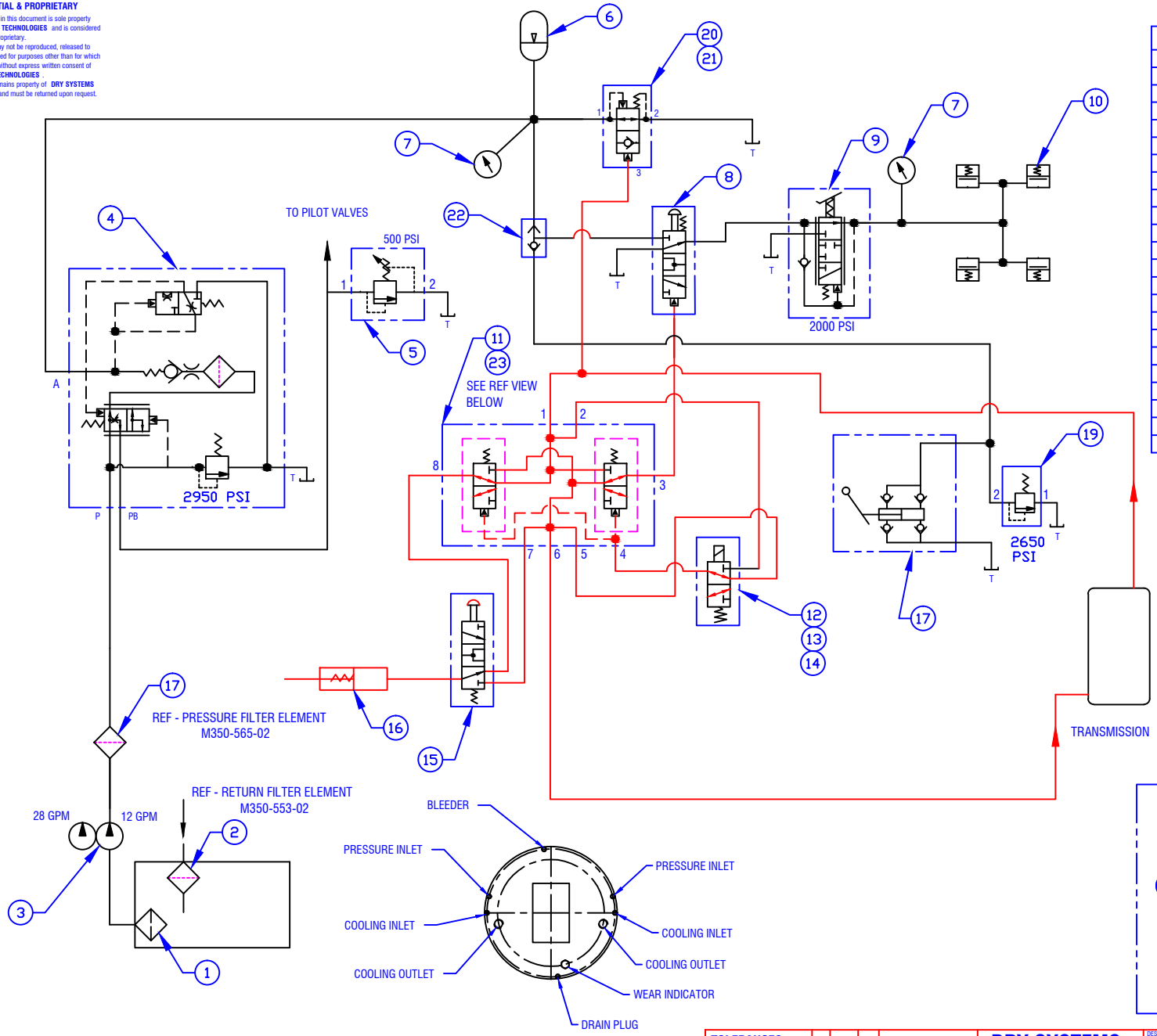

BILL OF MATERIAL

ITEM #	DESCRIPTION	
1	SUCTION STRAINER	M350-664-01
2	RETURN FILTER	M350-553-01
3	TANDEM PUMP	M350-667-01
4	CHARGE VALVE	M350-528-01
5	PRESSURE REDUCING VALVE	M350-530-01
6	ACCUMULATOR	M350-509-01
7	BRAKE PRESSURE GAUGE (2)	M350-558-01
8	RELAY VALVE	M350-668-01
9	FOOT VALVE	M350-508-02
10	SAHR AXLE BRAKES	———
11	PILOT VALVE MANIFOLD	M350-561-01
12	VALVE CARTRIDGE	M192-537-01
13	VALVE COIL, 24V	M192-530-02
14	BODY, VALVE	M192-539-01
15	DECLUTCH BYPASS VALVE	M350-562-01
16	DECLUTCH VALVE	———
17	HAND PUMP	M350-527-01
18	HIGH PRESSURE FILTER	M350-565-01
19	RELIEF VALVE	M350-563-01
20	DISCHARGE VALVE	M350-653-01
21	BODY, VALVE	M350-653-02
22	SHUTTLE VALVE	M350-655-01
23	BRAKE PILOT VALVE (2)	M350-560-01

INSIDE VIEW OF WHEEL END - TYP

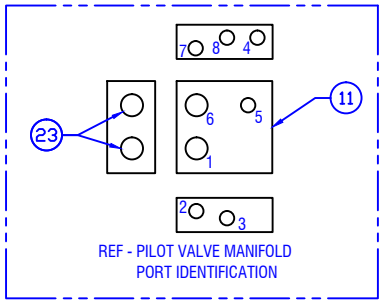

REF - PILOT VALVE MANIFOLD
PORT IDENTIFICATION

TOLERANCES
Linear unless noted
Machined: ±0.005
Fabricated: ±0.02
Angular: ±1/2°
Surface finish 125

REV	DATE	NAME	DESCRIPTION

DRY SYSTEMS TECHNOLOGIES
8102 LEMONT ROAD, SUITE 700
WOODRIDGE, IL 60517
Phone: 630-427-2051 Fax: 630-427-1036
E-Mail: eng@drysystemstech.com

DESCRIPTION: Hydraulic Dia Brakes
NO REQD
SCALE: None
DATE: JULY 2012
DRAWN BY: DHR
MATERIAL
APPROVED BY
DRAWING NO: **M347-001-01**

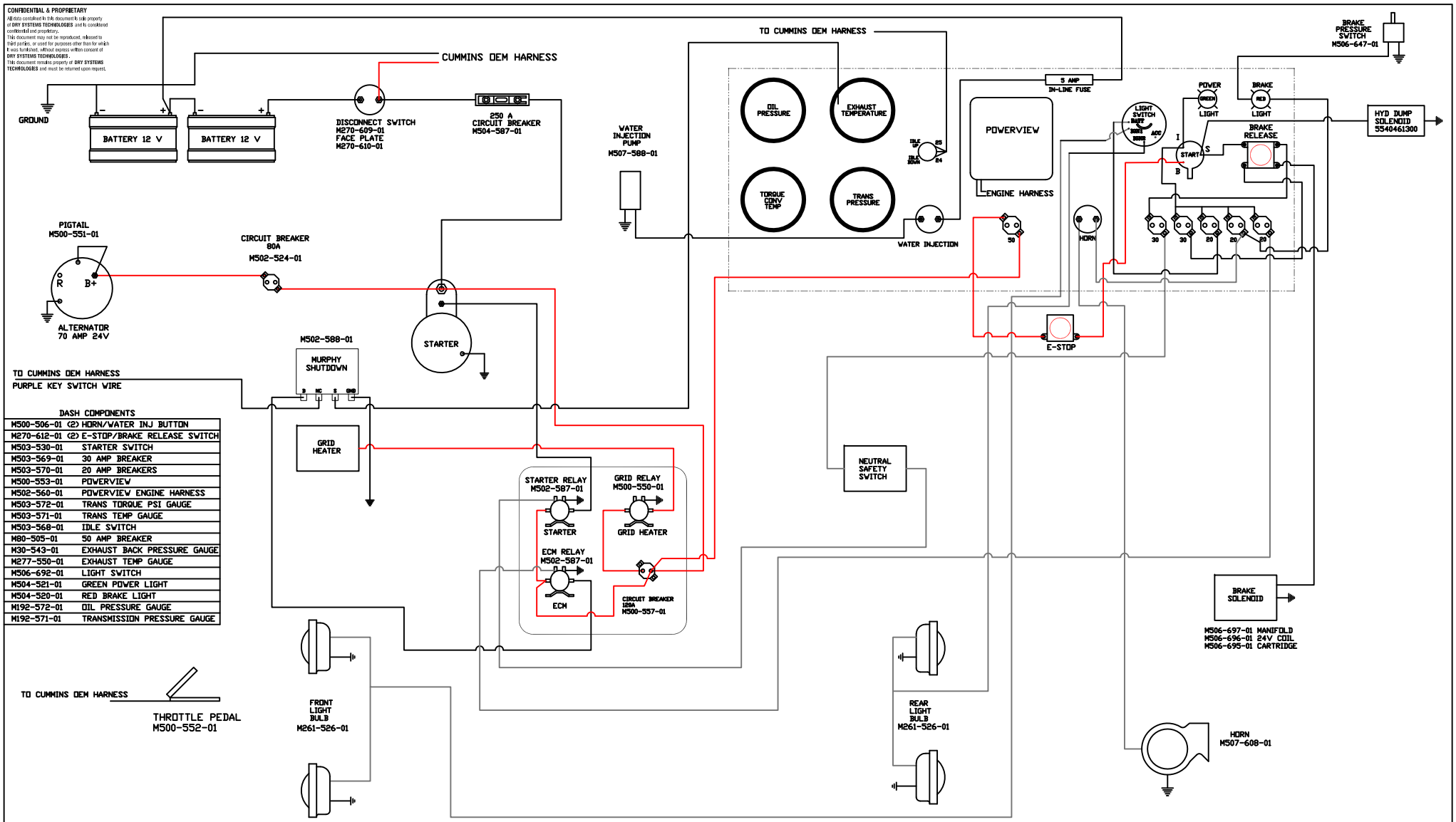

DASH COMPONENTS

M500-506-01	(2)	HORN/WATER INJ BUTTON
M270-612-01	(2)	E-STOP/BRAKE RELEASE SWITCH
M503-530-01		STARTER SWITCH
M503-569-01		30 AMP BREAKER
M503-570-01		20 AMP BREAKERS
M500-553-01		POWERVIEW
M502-560-01		POWERVIEW ENGINE HARNESS
M503-572-01		TRANS TORQUE PSI GAUGE
M503-571-01		TRANS TEMP GAUGE
M503-568-01		IDLE SWITCH
M80-505-01		50 AMP BREAKER
M30-543-01		EXHAUST BACK PRESSURE GAUGE
M277-550-01		EXHAUST TEMP GAUGE
M506-692-01		LIGHT SWITCH
M504-521-01		GREEN POWER LIGHT
M504-520-01		RED BRAKE LIGHT
M192-572-01		OIL PRESSURE GAUGE
M192-571-01		TRANSMISSION PRESSURE GAUGE

DST 35S
CUMMINS 6.7 , 24 VOLT

TOLERANCES
Linear unless noted
Machined: ±0.005
Fabricated: ±0.02
Angular: ±1/2°
Surface finish 125

DRY SYSTEMS TECHNOLOGIES
1430 US HIGHWAY 45 NORTH
VIENNA, IL 62995
Phone: 618-658-3000 Fax: 618-658-3002
E-Mail: eng@drysystemstech.com

DESCRIPTION: WIRING DIAGRAM 24 VOLT
SCALE: NONE
DATE: JULY 2012
DRAWN BY: DHR
MATERIAL
APPROVED BY
DRAWING NO: M347-002-01

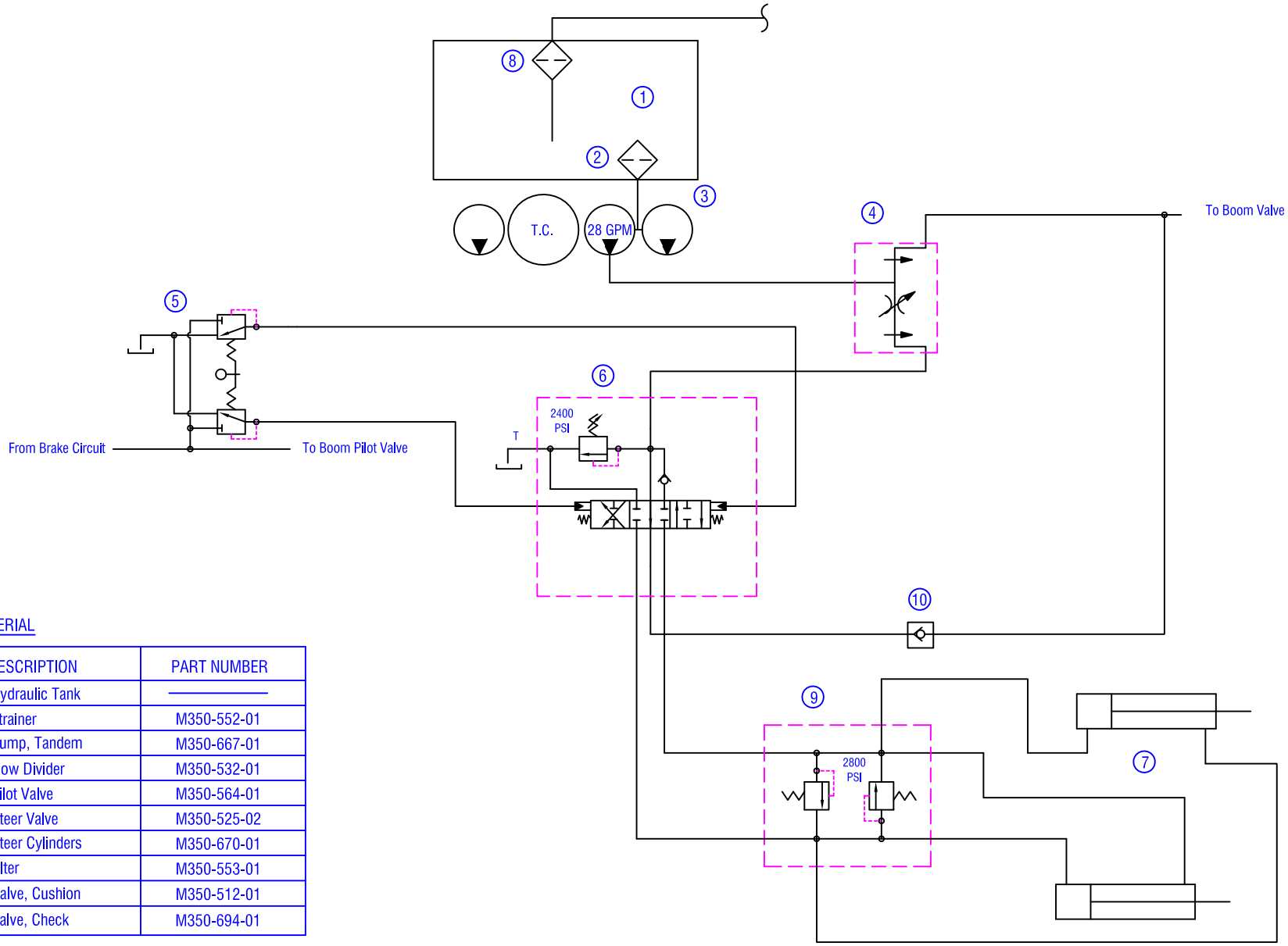

BILL OF MATERIAL

ITEM #	DESCRIPTION	PART NUMBER
1	Hydraulic Tank	————
2	Strainer	M350-552-01
3	Pump, Tandem	M350-667-01
4	Flow Divider	M350-532-01
5	Pilot Valve	M350-564-01
6	Steer Valve	M350-525-02
7	Steer Cylinders	M350-670-01
8	Filter	M350-553-01
9	Valve, Cushion	M350-512-01
10	Valve, Check	M350-694-01

REF - PARKER STEER VALVE

TOLERANCES
Linear unless noted
Machined: ±0.005
Fabricated: ±0.02
Angular: ±1/2°
Surface finish 125

REV	DATE	NAME	DESCRIPTION

DRY SYSTEMS TECHNOLOGIES
8102 LEMONT ROAD, SUITE 700
WOODRIDGE, IL 60517
Phone: 630-427-2051 Fax: 630-427-1036
E-Mail: eng@drysystemstech.com

DESCRIPTION: Hydraulic Dia Steering
NO REQD
SCALE: NONE
DATE: FEB 2012
DRAWN BY: DHR
MATERIAL
APPROVED BY
DRAWING NO: **M350-001-04**

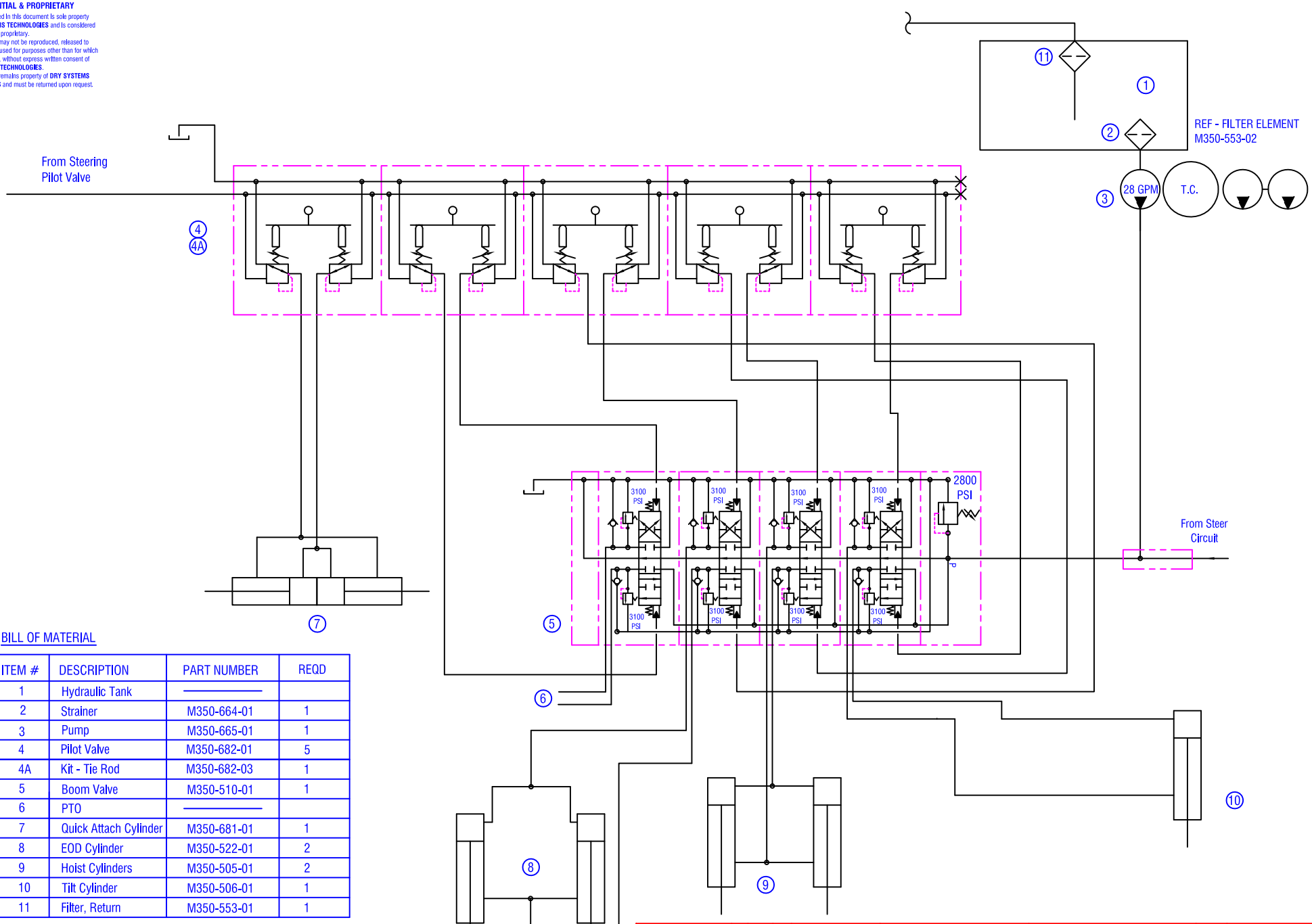

BILL OF MATERIAL

ITEM #	DESCRIPTION	PART NUMBER	REQD
1	Hydraulic Tank	————	
2	Strainer	M350-664-01	1
3	Pump	M350-665-01	1
4	Pilot Valve	M350-682-01	5
4A	Kit - Tie Rod	M350-682-03	1
5	Boom Valve	M350-510-01	1
6	PTO	————	
7	Quick Attach Cylinder	M350-681-01	1
8	EOD Cylinder	M350-522-01	2
9	Hoist Cylinders	M350-505-01	2
10	Tilt Cylinder	M350-506-01	1
11	Filter, Return	M350-553-01	1

TOLERANCES
Linear unless noted
Machined: ±0.005
Fabricated: ±0.02
Angular: ±1/2°
Surface finish 125

REV	DATE	NAME	DESCRIPTION

DRY SYSTEMS TECHNOLOGIES
8102 LEMONT ROAD, SUITE 700
WOODRIDGE, IL 60517
Phone: 630-427-2051 Fax: 630-427-1036
E-Mail: eng@drysystemstech.com

DESCRIPTION: Hydraulic Dia Boom
NO REQ'D
SCALE: NONE
DATE: JUL 2012
DRAWN BY: DHR
MATERIAL
APPROVED BY
DRAWING NO: **M350-008-06**

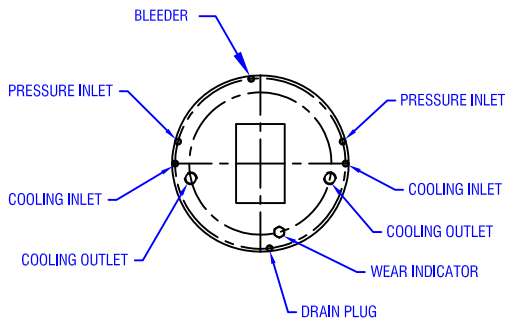

INSIDE VIEW OF WHEEL END - TYP

BILL OF MATERIAL

ITEM #	DESCRIPTION	PART NUMBER
1	HYDRAULIC TANK	————
2	PUMP	M350-567-03
3	FLOW DIVIDER	M350-568-01
4	SAHR AXLE BRAKES	————
5	RETURN FILTER	M350-570-01
6	CHECK VALVE	M350-580-01
7		
8	RELIEF VALVE	M350-643-01
9	RELIEF VALVE BODY	M350-643-02

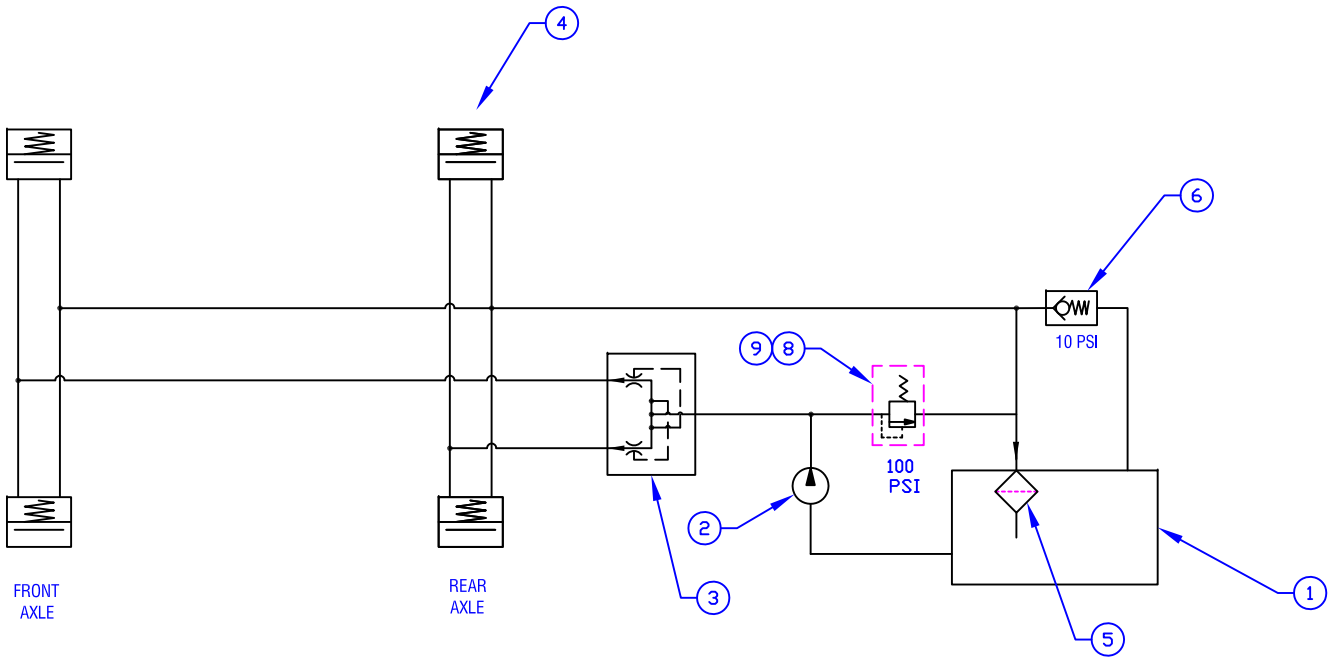

35S CUMMINS 6.7 BRAKE COOLING

TOLERANCES
Linear unless noted
Machined: ±0.005
Fabricated: ±0.02
Angular: ±1/2°
Surface finish 125

REV	DATE	NAME	DESCRIPTION

DRY SYSTEMS TECHNOLOGIES
8102 LEMONT ROAD, SUITE 700
WOODRIDGE, IL 60517
Phone: 630-427-2051 Fax: 630-427-1036
E-Mail: eng@drysystemstech.com

DESCRIPTION: Hyd Dia Brake Cooling
NO REQ'D
SCALE: None
DATE: NOV 2012
DRAWN BY: DHR
MATERIAL:
APPROVED BY:
DRAWING NO: **M350-009-03**

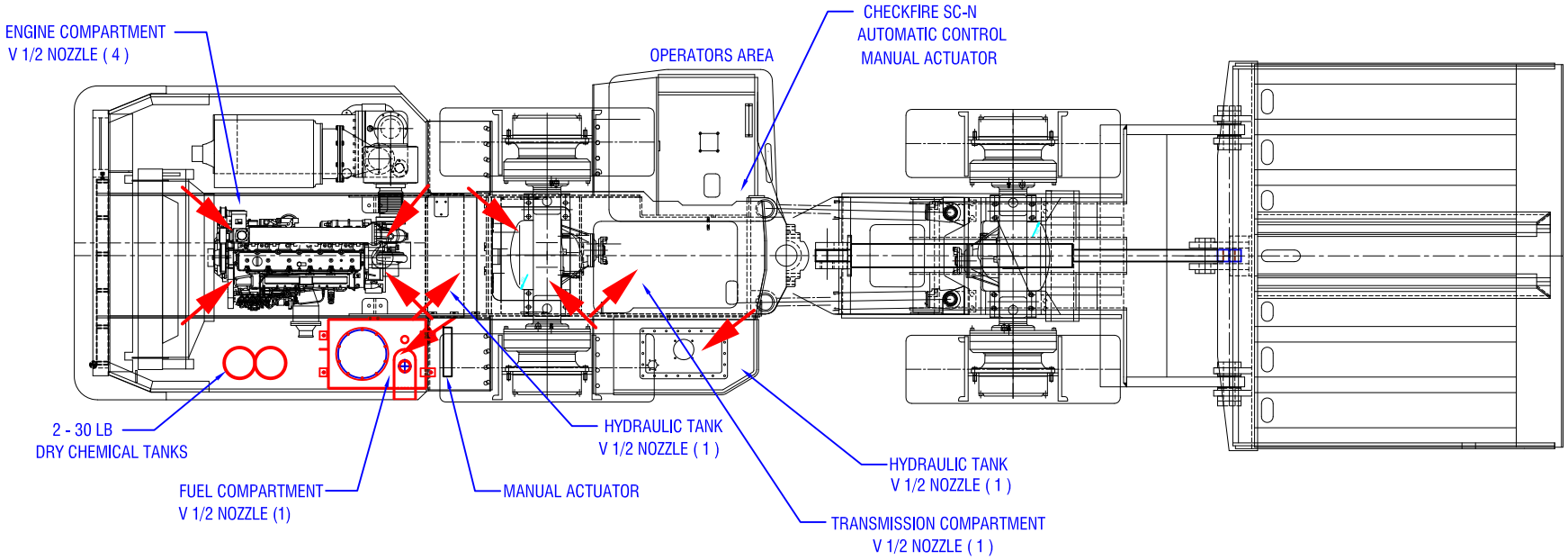

NOZZLE LOCATIONS AND DISCHARGE DIRECTIONS

TOLERANCES Linear unless noted Machined: ±0.005 Fabricated: ±0.02 Angular: ±1/2° Surface finish 125	REV	DATE	NAME	DESCRIPTION	**DRY SYSTEMS TECHNOLOGIES** 1430 US HWY 45 NORTH VIENNA , IL. 62995 Phone: 618-658-3000 Fax: 618-658-3002	DESCRIPTION: DST 35S OUTBY FIRE SUPPRESSION SYSTEM NO REQ'D SCALE: NONE DATE: JULY 2012 DRAWN BY: DHR MATERIAL APPROVED BY DRAWING NO: **M350-103-04**

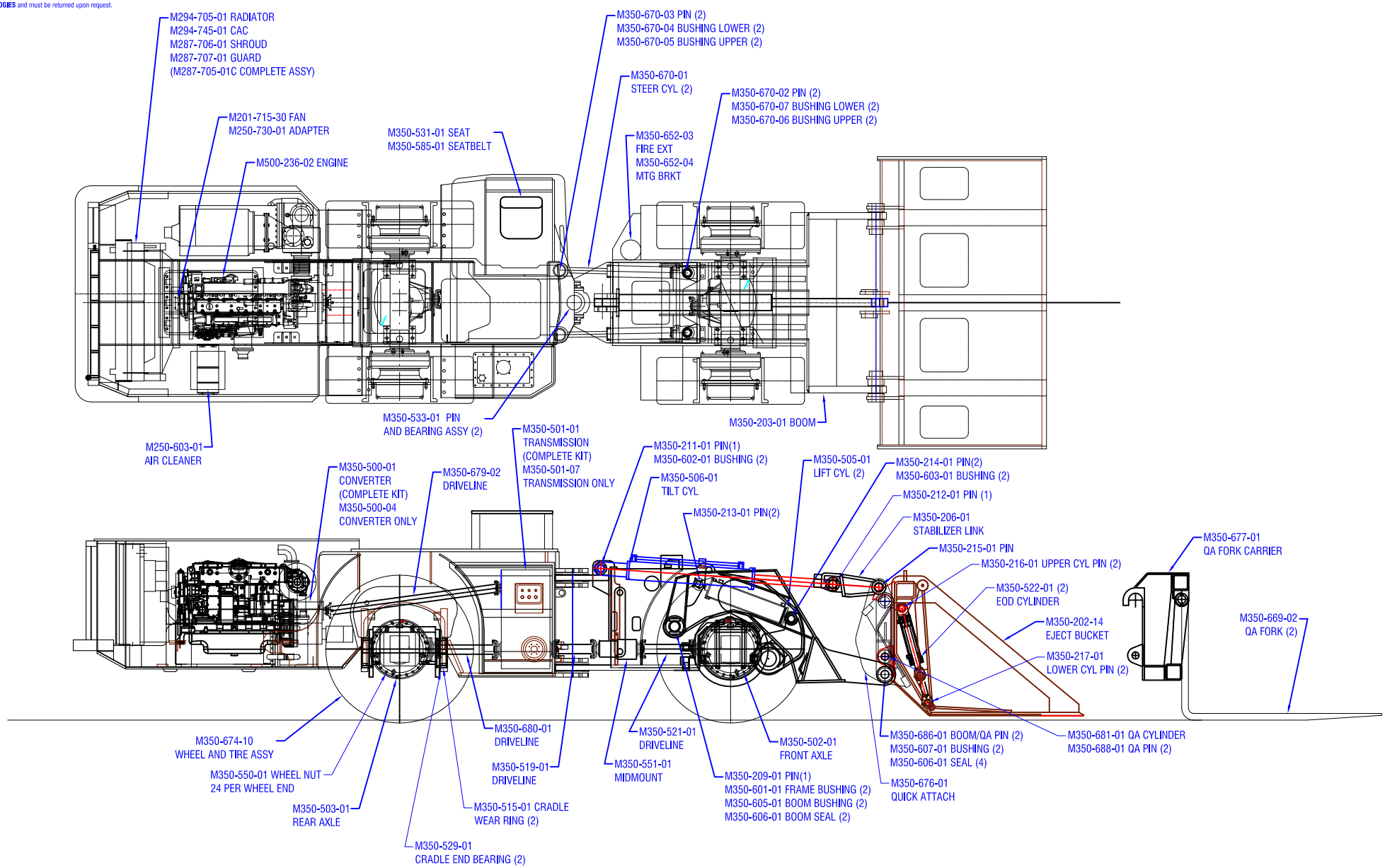

TOLERANCES					
Linear unless noted					
Machined: ±0.005					
Fabricated: ±0.02					
Angular: ±1/2°					
Surface finish 125	REV	DATE	NAME	DESCRIPTION	

DRY SYSTEMS TECHNOLOGIES
8102 LEMONT ROAD, SUITE 700
WOODRIDGE, IL 60517
Phone: 630-427-2051 Fax: 630-427-1036
E-Mail: eng@drysystemstech.com

DESCRIPTION: DST OUTBY 35S COMPONENT DRAWING			NO REQ'D
SCALE: NONE	DATE: NOV 2012	DRAWN BY: DHR	
MATERIAL		APPROVED BY	
DRAWING NO: M350-104-04			

M500846 OUTBY KIT

Item Seq	Component	Item Description	Quantity
10	M168-717-02	BOTTLE, COOLANT RECOVERY, 2 Gal	1
20	M190-301-01	HEAT EXCHANGER ASS'Y	1
30	M201-715-30	FAN 32 PUSHER	1
40	M230-214-01	FLANGE, HT EXCH	1
70	M250-730-01	FAN HUB ADAPTER	1
80	M250-759-01	HOSE BELLOWS 3.5 CAC	3
90	M250-760-01	HOSE CLAMP 3 1/4 - 4 1/8, Constant Torque	6
100	M257-207-01	ADAPTER EXHAUST, 4-3, OD-OD	1
110	M272-701-01	PIPE 2OD	1
120	M277-550-01	GAUGE EXHAUST TEMPERATURE, w/shutdown switch	1
130	M279-203-01	REDUCER 3.5OD X 3.00OD	1
140	M281-430-01	FILTER HOUSING, 16,, w/lever clamps, inlet flange	1
150	M292-214-01	TUBING STRAIGHT EXHAUST 3.5X14, Aluminized, 10' length	1
160	M292-215-01	TUBING STRAIGHT EXHAUST 4X16G, Aluminized, 10' Length	0.5
170	M292-216-01	ELBOW 90DEG 4 EXHAUST, ID OD	3
180	M292-217-01	CLAMP, SEAL BAND, 4,	4
190	M292-218-01	CLAMP, U-BOLT, HEAVY-DUTY, 4,	3
220	M295-425-01	ELBOW OUTLET	1
230	M30-411-01R	FILTER EXHAUST 16,	1
240	M30-543-01	GAUGE EXHAUST BACKPRESSURE	1
260	M302-201-01	FLANGE, OUTLET CATALYST	2
270	M314-210-01	CATALYST, 11IN OUTBY	1
280	M320-203-01	ELBOW, SHORT RADIUS 90DEG 3.5,	4
290	M320-759-01	HUMP HOSE, 3 CAC	1
300	M320-760-01	HOSE CLAMP 2 3/4 - 3 5/8, Constant Torque	2
310	M38-710-02	SURGE TANK..	1
330	M500-504-01	KIT, WATER INJECTION OUTBY 24V	1
340	M500-514-01	SNUBBER GAUGE	2
350	M500-553-01	POWERVIEW	1
360	M500-701-01	PIPE TRANS COOLER TO INLET, Heat Exch	1
370	M500-702-01	PIPE REAR OF ENGINE	1
380	M500-703-01	PIPE INLET HEAT EXCH	1
390	M500-704-01	PIPE OUTLET HEAT EXCHANGER	1
400	M500-705-01	PIPE RAD TO THERMOSTAT	1
410	M500-706-01	PIPE CONNECTOR 2.5,	2
420	M59-591-01	KIT, OUTBY RAW EXHAUST PORT	1
430	M600-563-01	BRASS BARB MALE 3/8 X 1/8NPT	1
440	M600-573-01	BRASS BARB MALE 3/4 X 1/2NPT	2
450	M600-576-01	BRASS BARB ELBOW 3/8 X 1/8 NPT	1
460	M600-702-01	HOSE CONNECTOR 2 1/4 X 2 1/2	1
470	M600-704-01	HOSE CONNECTOR 1 3/4 X 2	1
480	M600-706-01	HOSE RUBBER 5/8 X 3/4 90DEG	1
490	M600-707-01	HOSE 90 DEG RADIATOR 2 1/2IN	6
500	M600-711-01	HOSE CONNECTOR 2 X 2 1/2	1

510	M600-717-01	HOSE RUBBER 2 1/2 X 3FT 4 PLY	2
520	M600-727-01	HOSE CLAMP 1 1/4 - 2 1/4	4
530	M600-728-01	HOSE CLAMP 2-3IN	20
540	M600-729-01	HOSE CLAMP 1/2 - 13/16IN	10
550	M600-730-01	HOSE CLAMP 7/8 - 1 1/4IN	10
560	M600-735-01	HOSE RUBBER 3/4" ID, 1.06" OD	20
600	M270-609-01	SWITCH BATTERY DISCONNECT	1
610	M270-610-01	FACE PLATE, Battery Disconnect	1
620	M270-612-01	SWITCH PUSH/PULL RED KNOB, Double Stack	2
630	M500-213-01	BARRIER, HEAT ALUMINIZED TAPE, 1-1/2x15'	8
640	M500-506-01	SWITCH, PUSHBUTTON MOMENTARY	1
650	M500-550-01	RELAY, GRID HEATER 24V	1
660	M500-551-01	ALTERNATOR PIGTAIL	1
670	M500-552-01	PEDAL, ELECTRONIC ACCELERATOR, Cummins	1
680	M500-557-01	CIRCUIT BREAKER, 120A, Sealed, Manual Reset	1
690	M502-524-01	CIRCUIT BREAKER 80A	1
700	M502-560-01	HARNESS CUMMINS QSB4.5/QSB6.7	1
710	M502-587-01	SOLENOID SWITCH, 24 VOLT	2
720	M502-588-01	SWITCH, MAGNETIC, 24V, NC/NO, 30 sec.delay	1
730	M503-530-01	SWITCH, START & IGNITION	1
740	M503-569-01	CIRCUIT BREAKER, 30 AMP, MANUAL RESET	2
750	M503-570-01	CIRCUIT BREAKER, 20 AMP, MANUAL RESET	3
760	M503-571-01	GAUGE, CONVERTOR TEMP, MECHANICAL	1
770	M503-572-01	GAUGE, TRANS PRESS, R/B M192-571-01	1
780	M504-520-01	LIGHT, INDICATOR 24V RED	1
790	M504-521-01	LIGHT, INDICATOR 24V GREEN	1
800	M504-587-01	CIRCUIT BREAKER, STARTER 250A, With Enclosure and Connectors	1
810	M80-505-01	CIRCUIT BREAKER, 50A, Sealed, Manual Reset	1
820	M506-692-01	SWITCH, LIGHT	1
830	M506-694-01	ASSY, LIGHT, 24V	4
840	M507-608-01	HORN, 24V	1
850	M600-751-01	HOSE, HEATER, 3/8" ID	30
860	M287-705-01C	RADIATOR ASSEMBLY COMPLETE	1
870	M270-601-01	CABLE BATTERY 1/0, Black	12
880	M270-605-01	CABLE #8 RED	25
890	M270-606-01	SLEEVING SLIT-CONVOLUTED 1/4,, Flame Retardant - 100 ft	1
900	M270-607-01	SLEEVING SLIT-CONVOLUTED 1/2,, Flame Retardant	1
910	M270-608-01	CABLE #6 RED	25
920	M501-542-01	HOSE SLEEVE - 1.06 ID	25
930	M501-543-01	HOSE SLEEVE - 1.42 ID	25
940	M502-543-01	HOSE 3/16X7/16 MULTI-PURPOSE, hose	25
950	M508-516-01	TERMINAL BOARD	1
960	M508-519-01	BATTERY TERMINAL COVERS	1
970	M506-540-01	ENCLOSURE BOX, 9.5 X 7.2 X 5.1 NEMA 4X	1
1050	M302-003-01	CO SAMPLING SYSTEM	1
1070	M230-001-01	COOLING SCHEMATIC	1
1120	M500-236-02	ENG SPEC, CUMMINS QSB6.7	1

1130	M250-582-01	GAUGE, INTAKE VACUUM	1
1140	M250-724-01	OIL COOLER, WATER COOLED, 6DIA X 30	1

.

DST Operation and Maintenance Index –

1430 US HIGHWAY 45 N, VIENNA, ILLINOIS, 62995 PHONE 618-658-3000, FAX 618-658-3002
www.drysystemstech.com

DRY SYSTEMS TECHNOLOGIES®

OPERATION AND MAINTENANCE MANUAL

DST DRY SYSTEM®

SECTION A
ON BOARD CLEANING SYSTEM
FOR OUTBY MACHINE

M301-016-11

DRY SYSTEMS TECHNOLOGIES®
8102 Lemont Road, Suite 700
WOODRIDGE, IL 60517, USA
Phone: 630-427-2051 * Fax: 630-427-1036
E-mail: eng@drysystemstech.com

DATED MARCH 2007 6 Pages

DRY SYSTEMS TECHNOLOGIES®

8102 Lemont Road, Suite 700, Woodridge, Illinois 60517, USA
Phone: 630-427-2051 * Fax: 630-427-1036 * E-mail: eng@drysystemstech.com

INSTRUCTIONS FOR USING THE ON-BOARD CLEANING SYSTEM AND FOR REPLACING THE EXHAUST PARTICULATE FILTER

Background:

The Dry System™ supplied by Dry Systems Technologies® consists of a unique patented arrangement of components that provide a diesel power package and superior emissions reduction from diesel engines. The system can operate at very minimal maintenance, but requires some attention by the operator to maintain its permissibility and clean exhaust.

The Dry System™ is fitted with a tube-and-shell heat exchanger. It reduces the exhaust temperature from about 950-1150° F in the manifold to a safe temperature of less than 300° F before exhausting to the atmosphere.

Because of the rapid cooling of the exhaust gases inside the heat exchanger, the airborne sub-micron diesel particles agglomerate (cling to each other) and form larger particles. However, some of these particles attach themselves to the cold tube walls, where they accumulate over time. This process is completely normal as part of the operation of the Dry System™, or any system that cools the exhaust gases.

After the particle accumulation has reached a certain thickness, the tubes become partially restricted, and both exhaust backpressure and temperature increase. The exhaust backpressure and the exhaust gas temperature can be monitored on the exhaust-backpressure gauge and the exhaust-temperature gauge which are conveniently mounted in the operator's compartment.

It is the responsibility of the operator to monitor the exhaust backpressure and exhaust temperature gauges frequently while operating the diesel machine.

Activating the On-board Cleaning System

Once the exhaust backpressure increases, the removal of these internal deposits is necessary to maintain a clean and safe exhaust system. The Dry System™ is equipped with a patented **On-board Cleaning System™** that allows removal of the soot deposits while operating the machine. The **On-board Cleaning System™** consists of a small water supply bottle, a metered actuator and an injection nozzle. The 1 quart (1 liter) water bottle is located inside the engine compartment, contains several shifts supply and must be filled with clean water (such as bottled water or drinking water) only. The injection nozzle is located near the inlet of the heat exchanger. A cab mounted push button or valve is all the operator needs to perform the cleaning process while operating the machine.

When activated (for five seconds) by the operator with the cab-mounted push button, a very small metered amount of water is injected into the hot exhaust inlet of the heat exchanger. The water flashes into steam and expands to more than 200 times of its original volume. This sudden pressure rise (and not the water itself) causes the soot deposit to dislodge from the tube walls to be carried downstream by the exhaust gas to the particulate filter where it is trapped.

DRY SYSTEMS TECHNOLOGIES®

8102 Lemont Road, Suite 700, Woodridge, Illinois 60517, USA

Phone: 630-427-2051 * Fax: 630-427-1036 * E-mail: eng@drysystemstech.com

INSTRUCTIONS FOR USING THE ON-BOARD CLEANING SYSTEM AND FOR REPLACING THE EXHAUST PARTICULATE FILTER

This procedure is the most important action the operator has to take. Neglect of this operation will cause high exhaust backpressure which will inevitably lead to reduced filter life and triggering of the safety shut-down system. Using the On-board Cleaning System™ properly is the responsibility of the machine operator.

There will be no visible water vapor or smoke emitted from the exhaust system while the on-board cleaning system is activated. The only indication to verify proper injection is to monitor the exhaust gauges. Initially, the exhaust backpressure will rise, followed by a drop to below its starting point. There should also be a small simultaneous reduction in exhaust gas temperature.

The most effective time to activate the On-board Cleaning System™ is when the engine is hot and under load. At a minimum, the On-board Cleaning System™ should be activated **twice** each operating shift, and while the engine is hot and working hard. There is no harm done if the On-board Cleaning System is used more often, except that the water supply gets depleted quicker.

The On-board Cleaning System™ will not function on a cold engine or at idle. Using the on-board cleaning system on a cold engine and without load on the engine is ineffective. **Do not activate the On-board Cleaning System™ on a cold engine.**

Frequent use of the on-board cleaning system is a very important step to keep the DST Management System operating efficiently and safely. The amount of water that is injected is metered by the five seconds that the button is held. The On-board Cleaning System is ready for use immediately after release of the electric push button that is located in the operator's compartment.

It is the responsibility of the operator to activate the On-board Cleaning System at least twice a shift with the engine hot and under load, more often if judged necessary. It is safe to activate the On-board Cleaning System in any part of the mine where diesel equipment may be operated.

INSTRUCTIONS FOR USING THE ON-BOARD CLEANING SYSTEM AND FOR REPLACING THE EXHAUST PARTICULATE FILTER

Diagnosing High Exhaust Backpressure

The typical life cycle of the Disposable Exhaust Particulate Filter (DPM Filter) can range from 40-100 hours, depending on the operating cycle of the machine. Once the exhaust system backpressure can no longer be reduced by the On-board Cleaning System™, the DPM Filter maybe loaded to its capacity. Before changing the filter, a quick diagnostic test should be performed to determine if the filter is fully loaded, or if the heat exchanger is fouled and needs flushing. An optional diagnostic gauge that measures the differential pressure across the heat exchanger is installed inside the engine compartment. The reading of this gauge, together with the backpressure gauge, taken under full engine speed and no load (high idle), can be used to determine the next action.

- A reading of the backpressure gauge at or near the maximum, combined with a pressure differential across the heat exchanger (diagnostic gauge) in the range of 8-12" WG is an indication of a loaded filter. The next step should be to exchange the loaded exhaust particulate filter with a clean exhaust particulate filter.

- A reading of the backpressure gauge at or near the maximum combined with a pressure differential across the heat exchanger (diagnostic gauge) greater than 20" WG is an indication of excessive soot deposit in the heat exchanger. The higher the reading on the diagnostic gauge, the more soot has built up inside the heat exchanger. THIS MAY BE AN INDICATION THAT THE ON-BOARD CLEANING SYSTEM HAS NOT BEEN USED PROPERLY OR FREQUENTLY ENOUGH. As a first step, the On-board Cleaning System should be used (with the engine hot and under load) to see if the pressure across the heat exchanger can be reduced.

- If the backpressure in the heat exchanger can not be reduced significantly, the next step should be to schedule the machine for flushing of the exhaust system by a trained and qualified mechanic.

- **REF**: MWM 916, The maximum allowable exhaust backpressure is 40" WG.
  Caterpillar 3300 PCNA The maximum allowable exhaust backpressure is 34" WG.
  Caterpillar 3300 PCTA , C-10 The maximum allowable exhaust backpressure is 27" WG.
  Cummins C8.3 The maximum allowable exhaust backpressure is 41" WG.
  Isuzu 6BG1, The maximum allowable exhaust backpressure is 41" WG.

It is the responsibility of the operator to perform the initial diagnostic test. It is safe to activate the on-board cleaning system in any part of the mine where diesel equipment may be operated. Any flushing operation must be scheduled through maintenance.

INSTRUCTIONS FOR USING THE ON-BOARD CLEANING SYSTEM AND FOR REPLACING THE EXHAUST PARTICULATE FILTER

Flushing of the System

If the On-board Cleaning System™ is used as described above, and if engine operation under light load and excessive idling are minimized, flushing of the exhaust system should seldom become necessary.

Flushing of the exhaust system must be performed by a trained and qualified mechanic and at an approved location. Should flushing become necessary, keep in mind that this not the same as on-board cleaning.

Flushing of the DST Dry System™ is performed by attaching an external water supply hose to the connecting port. Unlike during On-board Cleaning™ that uses only a few ounces of water, significant amounts (several gallons) of water are passed through the exhaust system during flushing operation. This will remove the soot deposited inside the heat exchanger that is not removed during On-board Cleaning™. Flushing may be performed during any time of the operating cycle, but only at a suitable location, as follows:

- The machine MUST be located at an outby area of the mine or a shop.
- Ventilation in the area should be into the return air.
- Water must be available at the area.
- Remove the exhaust filter according to the “Particulate Filter replacing procedure” and make provisions to capture water from the filter housing.
- Attach the external water hook-up to the system.
- Start the engine; make sure it is up to operating temperature.
- Run the engine at high idle speed and record the heat exchanger differential pressure.
- At high idle speed, open the water valve to allow continuous water-flow through the water injector for about 1- 2 minutes.
- Close the water valve and continue running the engine for 3-5 minutes to allow the exhaust system to dry out. Check for the change in the heat exchanger differential pressure gauge. A normal reading would be 8-14” WG. A higher reading indicates that there still are soot deposits inside the system.
- If needed, repeat the flushing as described above.
- If successful, install a new exhaust filter according to the “Exhaust Filter replacing procedure”.

Do not perform the flushing procedure underground without a filter in place, or if there are indications that the filter has become damaged during the flushing.

Flushing without a particulate filter installed must be performed as follows:

- Remove the particulate filter and provide for some means to capture the water from the exhaust system.
- Re-install the lid to the filter housing.
- Make sure there is proper ventilation to remove the unfiltered diesel exhaust from the work area.

- Install the external water hook-up to the system.
- Set the brakes and start the engine; make sure it is up to operating temperature.
- Run the engine at high idle speed and record the heat exchanger differential pressure.
- At high idle speed, open the water valve to allow continuous water-flow through the water injector until the water out of the exhaust system is clear. (Typically 10-15 minutes)
- Close the water valve and continue running the engine for 5 minutes to allow the exhaust system to dry out. Check for the change in the heat exchanger differential pressure gauge. A normal reading is 8-12".
- If successful, install a new particulate filter according to the "Particulate Filter replacing procedure".

Do not perform the flushing procedure without proper ventilation and without a provision to capture the soot and water from the exhaust.

Procedure to replacing the Particulate Filter

Replacing the DST particulate filter may be performed in any part of the mine where diesel equipment can be operated. **The diesel engine must be stopped during the entire time while the exhaust filter is being replaced.** Proceed as follows:

- Open the lid to the exhaust particulate filter housing.
- Release the manual clamp or clamping cylinders with the valve at the end of the filter housing.
- Remove the new exhaust filter from its shipping box and inspect for damage from shipping and handling.
- Remove the loaded exhaust filter from the filter housing, inspect for obvious damage or leaks and place into the empty shipping box and mark the box with "Used" or "Dirty". Do not grip on the inside of the filter where the soot is deposited. Gloves should be worn while handling the dirty filter.
- Check the inside of the exhaust filter housing. Report any soot deposits to the Maintenance Department.
- Inspect the seal groove inside the filter housing. Make sure there are no remains of seal material or other matter in the seal groove. If necessary, remove any remains with a screwdriver or similar tool.
- Insert the clean exhaust filter, after visual inspections for damage, and seal.
- Set the manual clamp or clamping cylinders with the valve at the end of the filter housing
- Close the lid to the exhaust filter housing.
- Remove the box with the used filter according to disposal procedures at the mine.
- Start the engine and check the exhaust backpressure at high idle to be in the normal range.

DRY SYSTEMS TECHNOLOGIES®

OPERATION AND MAINTENANCE MANUAL

DST DRY SYSTEM®

SECTION C
CO SAMPLING PROCEDURE

To be performed by a trained and qualified mechanic

M301-018-01

DRY SYSTEMS TECHNOLOGIES®
8102 Lemont Road, Suite 700
WOODRIDGE, IL 60517, USA
Phone: 630-427-2051 * Fax: 630-427-1036
E-mail: eng@drysystemstech.com

REVISION 01 * DATED DECEMBER 2002 8 Pages

CO (Carbon Monoxide) SAMPLING INSTRUCTIONS FOR THE DST DRY SYSTEM™

Background:

MSHA requires that the engine-out untreated Carbon Monoxide of all Inby and heavy-duty Outby engines be checked weekly. The following is the applicable text (excerpts) that may be found in the **MSHA 30 CFR, Part 75.1914 (g) Regulations.** The test for untreated (engine out) CO emissions is mandatory and will also provide excellent feedback to the mechanic on the engine condition.

§75.1914 Maintenance of diesel-powered Equipment

(a) Diesel-powered equipment shall be maintained in approved and safe condition or removed from service.

(b) Maintenance and repairs of approved features and those features required by Sections 75.1909 and 75.1910 on diesel-powered equipment shall be made only by a person qualified under Section 75.1915.

(c) ……
(d) ……
(e) ……
(f) ……

(g) Undiluted exhaust emissions of diesel engines in diesel-powered equipment approved under part 36 and heavy-duty non-permissible diesel- powered equipment as defined in Section 75.1908(a) in use in underground coal mines shall be tested and evaluated weekly by a person who is trained to perform this task. The mine operator shall develop and implement written standard operating procedures for such testing and evaluation that specify the following:

- ***(1) The method of achieving a repeatable loaded engine operating condition for each type of equipment;***
- ***(2) Sampling and analytical methods (including calibration of instrumentation) that are capable of accurately detecting carbon monoxide in the expected concentrations;***
- ***(3) The method of evaluation and interpretation of the results;***
- ***(4) The concentration or changes in concentration of carbon monoxide that will indicate a change in engine performance. Carbon monoxide concentration shall not exceed 2,500 parts per million;***
- ***(5) The maintenance of records necessary to track engine performance.***

DRY SYSTEMS TECHNOLOGIES®

8102 Lemont Road, Suite 700, Woodridge, Illinois 60517, USA
Phone: 630-427-2051 * Fax: 630-427-1036 * E-mail: eng@drysystemstech.com

CO (Carbon Monoxide) SAMPLING INSTRUCTIONS FOR THE DST DRY SYSTEM™

The reasons for monitoring Engine-out CO Emissions

CO sampling became a mandatory procedure when MSHA released the new Part 75 regulations. It was introduced to ensure that diesel engines are operated in "as-approved" condition and settings. In most instances when a diesel engine develops a problem, the CO output will increase. Other emissions do not necessarily follow the same trend. Under normal operating conditions (at torque stall), CO output ranging from 200-300 ppm should be expected from a MWM D916-6 engine, 300-400 ppm for a Caterpillar 3300 engine. Whenever abnormally high CO is observed, an engine problem should be suspected, because CO increases when an engine develops a fault. Increased CO will not pinpoint to a specific problem, but based on past experience, the following may have happened: (In order of probability):

- The Intake Air Cleaner is plugged, causing too high an intake air restriction and air starvation of the engine. This makes the engine run too rich. (A plugged intake air cleaner is the cause in more than ¾ of all cases)
- Fuel injector problems, which could be a bad spray pattern of an injector and cause incomplete combustion.
- Improper fuel pump adjustment by having the fuel pump adjusted too rich or not properly de-rated for the operating altitude. This makes the engine run too rich.
- Mechanical problems with the engine, such as bad valve seals, leaking piston rings, low compression or similar problems. (Not frequent cause)
- The exhaust system is restricted, causing too high a backpressure.

CO (Carbon Monoxide) is an excellent diagnostic tool for the maintenance department to detect engine problems before they lead to failures. It has been used successfully by many mines in a similar way as oil analysis. The main purpose of CO sampling is to minimize exposure of the operator and other personnel to diesel exhaust.

The reasons for monitoring treated CO Emissions (after catalyst)
(Optional)

The DST Dry System™ is fitted with a catalyst that will reduce CO by up to 90% at exhaust temperatures above 300°F. A typical treated CO level in the exhaust is 20-40 ppm. If the catalyst would develop a problem, the treated CO levels will increase significantly. Therefore, whenever there is higher than normal CO, a problem with the catalyst should be suspected. If the treated CO levels are continuously greater than 100 ppm, the catalyst must be removed and checked for fouling.

DRY SYSTEMS TECHNOLOGIES®

8102 Lemont Road, Suite 700, Woodridge, Illinois 60517, USA
Phone: 630-427-2051 * Fax: 630-427-1036 * E-mail: eng@drysystemstech.com

CO (Carbon Monoxide) SAMPLING INSTRUCTIONS FOR THE DST DRY SYSTEM™

Permanently Installed CO Sampling Ports

To simplify this mandatory procedure, Dry Systems Technologies® developed and offers a permanently installed and MSHA Certified (31/D126) Flameproof Port™ assembly. All hardware remains permanently mounted in the exhaust system and on the machine. Drawn through a flameproof port, a cooling tube and a connecting hose, the exhaust gas portion for sampling is routed to the operator's cab. There, a soot filter and a water separator condition the exhaust gas to be suitable for **CO sampling with simple hand held instruments**.

A quick connect coupling is permanently mounted inside the operator's cab and allows the sampling from the safe location inside the operator's cab. The mating coupler is attached to the CO sampling instrument. **Only one person is required to sample the CO.** An optional Catalyst – out sampler may also be provided.

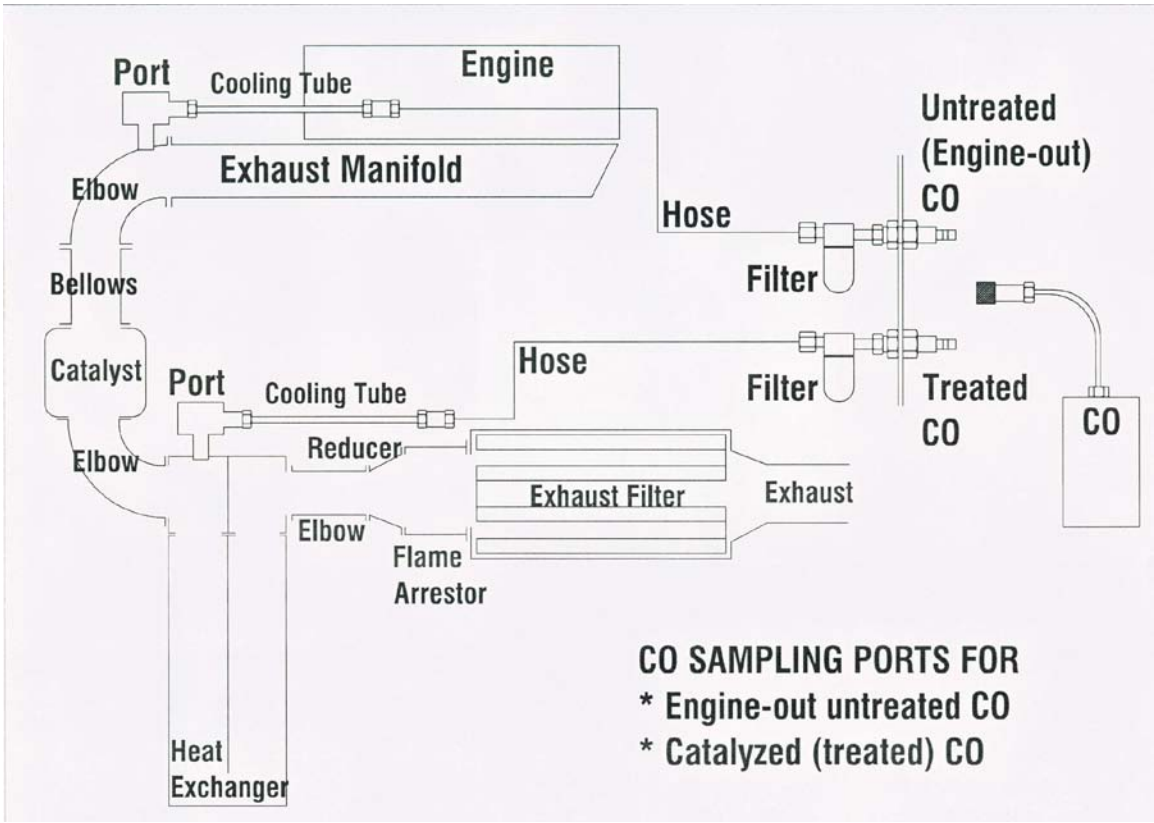

Figure 1: Sampling Schematic for untreated and (Optional) treated CO

DRY SYSTEMS TECHNOLOGIES®

8102 Lemont Road, Suite 700, Woodridge, Illinois 60517, USA
Phone: 630-427-2051 * Fax: 630-427-1036 * E-mail: eng@drysystemstech.com

CO (Carbon Monoxide) SAMPLING INSTRUCTIONS FOR THE DST DRY SYSTEM™

CO Sampling Procedure

The following is the standard procedure to obtain an accurate and repeatable CO sample.

- Place the machine in a safe location, make sure the area in front of the machine is clear and there is sufficient ventilation air. Sampling can be conducted in any area of the mine.
- Set the brakes and start the engine as outlined in the Operation and Maintenance Manual.
- Allow the engine to warm up to normal operating temperature. Taking the CO samples on a cold engine would provide incorrect results.
- Check all operating gauges to be in the normal operating range. The coolant temperature must be no lower than 170°F. If the intake restriction is greater than 25" WG or the exhaust backpressure is greater than 35" WG, perform the necessary maintenance before proceeding.
- Attach the CO Sampling Device to the quick connect port labeled **"Engine Out"** in the operator's cab.
- Re-check that the areas in front and behind of the machine are clear and that the parking brakes are set.
- Put the transmission into the **highest** gear and apply full throttle.
- Monitor the reading on CO Sampling Device. After about 45-90 seconds, the CO indication starts rising. Allow this to continue until the CO indication stabilizes.
- Start recording (5) separate sequential readings in one-minute intervals. Monitor the torque converter temperature while taking the samples. The intervals between the samples may have to be shortened to prevent overheating during the test. Do not allow the torque converter temperature to exceed the safe range.
- Stop sampling after (5) readings, or before if the torque converter fluid gets too hot.
- Slow the engine to low idle, put the transmission into neutral, then put the engine into high idle (without load) for about one minute to cool down the torque converter and the engine coolant.
- Remove the instrument and enter the CO readings on the report.
- Attach the CO Sampling Device to the Optional quick connect port labeled **"Catalyzed"** in the operator's cab.
- Re-check that the areas in front and behind of the machine are clear and that the parking brakes are set.
- Put the transmission into the **highest** gear and apply full throttle.
- Monitor the reading on CO Sampling Device. After about 45-90 seconds, the CO indication starts rising. Allow this to continue until the CO indication stabilizes.
- Start recording (5) separate sequential readings in one-minute intervals. Monitor the torque converter temperature while taking the samples. The intervals between the samples may have to be shortened to prevent overheating during the test. Do not allow the torque converter temperature to exceed the safe range
- Stop sampling after (5) readings, or before if the torque converter fluid gets too hot.
- Slow the engine to low idle, put the transmission into neutral, then put into high idle for about one minute to cool the torque converter and the engine coolant.
- Remove the instrument and record the CO readings on the report.

CO (Carbon Monoxide) SAMPLING INSTRUCTIONS FOR THE DST DRY SYSTEM™

CO Sampling Instruments

One of the advantages of the permanently installed CO sampling port system is that it conditions the exhaust gas where it can be monitored with inexpensive handheld instruments. The gas is cooled and filter for this purpose. There are three single gas (CO only) instruments that are readily available, relatively inexpensive and have acceptable accuracy and reliability:

- ECOM EM
- Industrial Scientific CO 260
- Industrial Scientific CO 262

More expensive instruments can be used if they are available to the mine, but provide not advantage. Handheld multi-gas instruments have been evaluated and did not have the necessary accuracy and reliability to be recommended. Handheld multi-gas instrument are fitted with very small sensors that tend to foul up in a very short period of time. The above listed handheld single gas instruments are fitted with larger sensors that hold up better.

Keep in mind that ALL instruments require periodic re-calibration. The calibration date is usually stated on a label attached to the instrument. Unless stated otherwise, we recommend calibration at least twice a year, or whenever inaccuracy is suspected.

Maintenance of the Flameproof Ports

When hot exhaust gas is drawn through small internal passages of the flameproof port and the cooling tube, it is cooled down and some soot will deposit inside the ports and the tubes. This is unavoidable.

When there is excessive soot inside the port, it will plug. As result no sample can be drawn and there is no indication on the CO instrument. As first corrective step, rotate the stem at the end of the flameproof port. If this does not clear the passage, the flameproof port must be removed, disassembled and both port and cooling tube cleaned with solvent. Make sure all solvent is cleaned off and the components are dry before reinstallation.

The filter and water separator remove soot and water that would otherwise damage the sampling head inside the CO sampling instrument. Periodically, the filter cartridge should be replaced. We recommend twice a year when the machine is in normal use. Failure to replace the filter will result in shorter sampler head life.

CO (Carbon Monoxide) SAMPLING INSTRUCTIONS FOR THE DST DRY SYSTEM™

Figure 2: Components of Flameproof Port Installation

Top left:	Intake restriction gauge and flameproof port for intake restriction
Top right:	Port for exhaust backpressure and CO sampling, Cooling tube (May be coiled or straight tube)
Center:	Exhaust backpressure gauge, water separator/filter (sample conditioner) and Quick Coupler
Bottom:	Matching quick coupler for CO instrument

DRY SYSTEMS TECHNOLOGIES®

8102 Lemont Road, Suite 700, Woodridge, Illinois 60517, USA
Phone: 630-427-2051 * Fax: 630-427-1036 * E-mail: eng@drysystemstech.com

CO (Carbon Monoxide) SAMPLING INSTRUCTIONS FOR THE DST DRY SYSTEM™

Record Keeping (Sample Form)

The following is a sample form to record the CO readings:

Mine Name	
Engine Model	
Engine Serial No	
Machine Model	
Machine Serial Number	
Mine Machine ID	
Mechanic	
Date	
Engine hours	

		Baseline for reference	#1 Sample	#2 Sample	#3 Sample	#4 Sample	#5 Sample	Average
CO Engine-out	ppm							
Coolant	°F							
Exhaust	°F							
Torque Converter	°F							
Engine Speed	rpm							
CO Catalyzed	ppm							
Coolant	°F							
Exhaust	°F							
Torque Converter	°F							
Engine Speed	rpm							

Signature: ……

DRY SYSTEMS TECHNOLOGIES®

OPERATION AND MAINTENANCE MANUAL

DST DRY SYSTEM®

SECTION D
PRE-OP INSPECTIONS

To be performed by the machine operator

M301-019-01

DRY SYSTEMS TECHNOLOGIES®
8102 Lemont Road, Suite 700
WOODRIDGE, IL 60517, USA
Phone: 630-427-2051 * Fax: 630-427-1036
E-mail: eng@drysystemstech.com

REVISION 01 * DATED DECEMBER 2002 3 Pages

8102 Lemont Road, Suite 700, Woodridge, Illinois 60517, USA
Phone: 630-427-2051 * Fax: 630-427-1036 * E-mail: eng@drysystemstech.com

PRE-OPERATING INSPECTION FOR THE DST DRY SYSTEM™

MSHA Requirements

The Part 75 MSHA regulations require that the machine operator performs a walk-around inspection of the machine before it is operated. The following is the text from the MSHA 30 CFR, Part 75.1914(e) regulations pertinent to this pre-op inspection.

MSHA 30 CFR Part 75.1914 Maintenance of diesel-powered equipment.

(a) Diesel-powered equipment shall be maintained in approved and safe condition or removed from service.

(b) Maintenance and repairs of approved features and those features required by Sections 75.1909 and 75.1910 on diesel-powered equipment shall be made only by a person qualified under Section 75.1915.

(c) …..
(d) …..

(e) Mobile diesel-powered equipment that is to be used during a shift shall be visually examined by the equipment operator before being placed in operation. Equipment defects affecting safety shall be reported promptly to the mine operator.

Note: MSHA text is provided for reference only. Refer to the official MSHA published regulations.

DST Dry System™ Inspection Requirements

The DST Dry System™ requires very little maintenance, when compared with water scrubbers. The pre-op inspection is required by MSHA to ensure there is no damage to the DST Dry System™ and all components are properly in place. It is not necessary to perform flushing and refilling of the DST Dry System™, as necessary with water scrubbers. There are no floats or water level sensors that must be checked.

The following form is intended to guide the operator through the walk-around inspection. Please refer also to any machine inspection procedures in the OEM manual, as the following page refers ONLY to the DST Dry System™.

DRY SYSTEMS TECHNOLOGIES®

8102 Lemont Road, Suite 700, Woodridge, Illinois 60517, USA
Phone: 630-427-2051 * Fax: 630-427-1036 * E-mail: eng@drysystemstech.com

PRE-OPERATING INSPECTION FOR THE DST DRY SYSTEM™

Dry System™ Pre-operation Checklist

OPERATOR'S PRE-OP CHECKLIST FOR THE DST SYSTEM DE-ENERGIZED WALK-AROUND INSPECTION PERFORMED BEFORE EACH SHIFT		
ITEM	DESCRIPTION	COMPLETED
1	Make certain equipment is in a safe condition and in a safe area prior to the inspection.	
2	Make sure the machine is clean and free of accumulations of combustibles.	
3	Check the DST Dry System™ for external damage and to determine that all components are in place and not damaged.	
4	Look for loose or missing DST components and loose or missing hardware.	
5	Look for gas leakage at each flange connection of the DST Dry System™.	
6	Inspect the bellows assembly for external damage or leakage.	
7	Check for damaged coolant hoses, vent hoses and coolant leaks.	
8	The surge tank must be completely full. **DO NOT OPEN RADIATOR CAP IF HOT.**	
9	Check the coolant overflow bottle. Coolant must be between upper and lower marks. Add coolant mix if needed.	
10	Check the radiator cap on top of the surge tank to be in place and tightened.	
11	Check the radiator core for obstructions, plugging, damage and leaks.	
12	Check the fan for broken or missing blades.	
13	Check all belts to be properly tightened and in good condition.	
14	Check the water level in the tank for the on-board cleaning system and top off with clean bottled water if necessary.	
15	Check all gauges for external damage.	
16	Replace all lids and secure all access doors as needed.	
17	Complete this form and place in operator's cab	
18	Report all damage or problems to Maintenance for further action.	

Name: …….. Date: ……..

DRY SYSTEMS TECHNOLOGIES®

OPERATION AND MAINTENANCE MANUAL

DST DRY SYSTEM®

SECTION F
COOLING SYSTEM FILLING PROCEDURE

To be performed by the machine operator

M301-021-01

DRY SYSTEMS TECHNOLOGIES®
8102 Lemont Road, Suite 700
WOODRIDGE, IL 60517, USA
Phone: 630-427-2051 * Fax: 630-427-1036
E-mail: eng@drysystemstech.com

REVISION 01 * DATED DECEMBER 2002 2 Pages

DRY SYSTEMS TECHNOLOGIES®

8102 Lemont Road, Woodridge, Illinois 60517, USA

Phone: 630-427-2051 * Fax: 630-427-1036 * E-mail: eng@drysystemstech.com

COOLING SYSTEM FILLING PROCEDURE FOR THE DST DRY SYSTEM™

The DST Dry System™ is fitted with a cooling system that incorporates a surge tank, a recovery bottle, and several vent lines to assure that the system has no trapped air. The system is self purging, once it is filled initially. As with all cooling systems, a mixture of 50% ethylene glycol and 50% treated (clean) water should be used for best performance. Never add untreated mine water to the cooling system. The following is the filling procedure for the system.

COOLING SYSTEM FILLING PROCEDURE

- Carefully open the pressure cap on the surge tank, after the system has cooled down and is not under pressure. (There is no radiator cap on the radiator itself) CAUTION: DO NOT ATTEMPT TO OPEN PRESSURE CAP WHEN COOLANT IS STILL HOT OR UNDER PRESSURE. INJURY OR BURNS COULD RESULT.
- Fill a mixture of 50% Ethylene Glycol and 50% filtered water into the surge tank, until the tank is completely full and the vent lines (3/8" clear hoses) are filled with coolant.
- Replace the pressure cap firmly and start the engine. Idle for 1-2 minutes to purge the remaining air from the system. Check for leaks.
- Carefully open the pressure cap on the surge tank and top off the surge tank with a mixture of 50% Ethylene Glycol and 50% filtered water.
- Repeat steps 3 and 4 if necessary.
- Replace the pressure cap firmly. Fill the overflow bottle half way with a mixture of 50% Ethylene Glycol and 50% filtered water
- Check the coolant level after about one hour of operation. If coolant is significantly lower, the cause for the coolant loss must be investigated. A normal loss in coolant due to temperature changes will be compensated by a rise or drop of the coolant in the overflow bottle. The surge tank should never contain air.

CAUTION: DO NOT ATTEMPT TO OPEN PRESSURE CAP WHEN COOLANT IS STILL HOT OR UNDER PRESSURE. INJURY OR BURNS COULD RESULT. DO NOT OPERATE SYSTEM WITH LOW COOLANT. ENGINE DAMAGE MAY RESULT. USE ONLY A MIXTURE OF 50% ETHYLENE GLYCOL AND 50% CLEAN (FILTERED) WATER AS COOLANT. NEVER ADD MINE WATER TO THE COOLING SYSTEM.

Service-Manual

Dry Systems
DST 35-S (91.7052.3; 91.7053.3)

KESSLER+CO

Edition 10/2009

Table of contents

Important remarks

Important remarks

For safety reasons, the operator should verify and service at regular intervals all of the bolted assemblies and all of the important safety locks such as:

- Wheel nuts
- Nuts of axle mounting bolts
- Bolts on the steering components and the brake system parts; if the screws are tightable, the Loctite contact breaks loose and remounting is necessary.
- Corrosion on the carrier elements (such as the axle spindle) is not acceptable for operational safety reasons.
- Verify seals, oil levels and lubrication at regular intervals.

Brakes

- Inspect brake lining and brake drum / brake disc regulary as well as wear of brake system parts.
- Inspect the free movement of brake system rods.
- In case of signs of excessive heating, consult a brake specialist or the manufacturer.

Instructions for ordering spare parts

We only accept liability for the original spare parts supplied by ourselves. We express clearly that the utilisation of other parts than the from us prescribed original spare parts, can change infavourably the characteristics of the axle prescribed by the construction and that thereby the safety can be affected. For damage caused by the utilisation of not original spare parts and accessories, any liability of the Kessler & Co GmbH is excluded. Please bear in mind that special manufacturing and delivery specifications apply to own as well as to foreign parts and that we always offer spare parts to the up - dated technical conditions and the up - dated legal prescriptions.

When ordering Kessler spare parts, please furnish the following information:

1. Order number (installation drawing no.) → see identification plate
2. Fabrication number → see identification plate
3. Vehicle producer
4. Description of the spare part
5. Spare part number (drawing - resp. DIN no.)
6. Number of pieces
7. Kind of delivery

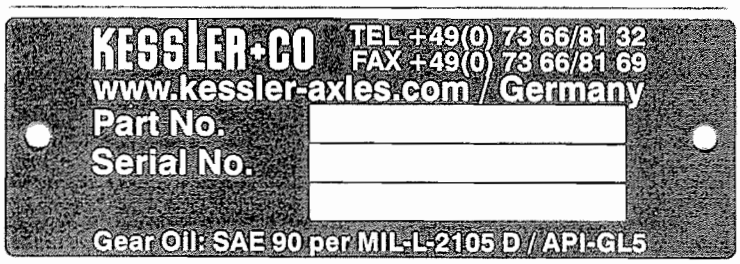

In case of doubt, consult Kessler & Co.

For major repairs or overhaul, it is recommendet that the complete axle assembly be returned to Kessler & Co.

General lubrication instructions

Lubrication points	see sheet 2.2 resp. installation drawing.
Lubricants	see sheet 2.3
Fill levels	Are checked at the level control plugs.
Oil change	Place the vehicle in a horizontal position. Draining of the oil is to be accomplished only in warm condition. Clean all lubrication points before opening them. Open the drain holes on the carrier assembly, on the wheel assemblies, and if present, on the interaxle differential and drop gear housing. On the hub assemblies, the drain plug should be turned downward. Oil draining Replacement of the oil draining plugs. Remove the oil filler plug as well as the oil level control plug on the carrier assembly, on the wheel assembly, and, if present, on the interaxle differential and drop gear housing. (See sheet 2.2 → lubrication points). Oil filling Check the oil level at the oil level plug hole (Overflow control). Wait a few minutes. If the oil level falls, add oil until the level remains constant. Clean the grease nipples before lubrication.
Lubrication intervals	see sheet 2.3

Important!

On the axles with self locking differentials, a noise is produced if normal oils are used In case of abnormal noises and in case of operation under bumpy conditions, use gear oil EP with additives of the “Limited Slip” type conforming to specification M 2C - 104 A.

In case of prolonged non - operation of the vehicle, it is recommended to start - up and operate all of the parts of the gear train every 6 months. For this purpose, maintain the proper oil level which also protects the axle against water intrusion.

The surfaces of the brake areas are to be preserved in humid locations. On start - up, a break - in of the braking system by intermittent operation is indispensable.

Lubrication points

The binding lubrication points have to be taken from the according installation drawing of the axle.

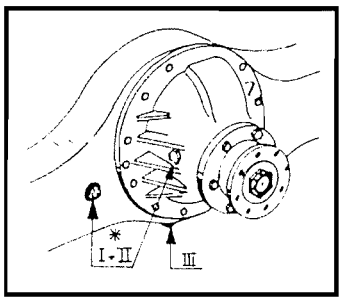

Single drive assembly

* The position is dependent from the respective axle version.

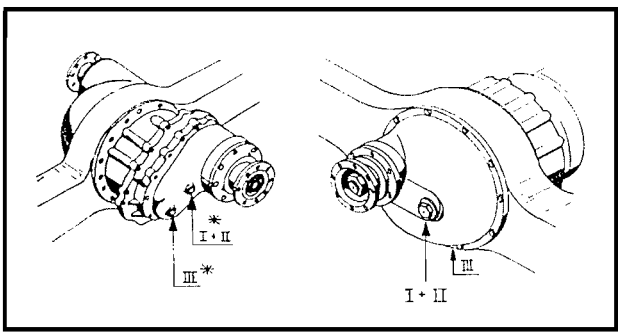

Drive assembly with throughdrive
Version with interaxle differential.
Fill 1,5 litre oil at I + II * for first - time filling and for refilling!

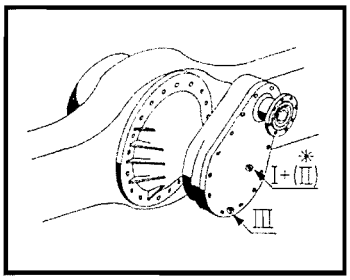

Drop gear D 51 / D 108

* II only at version with separately oil space.

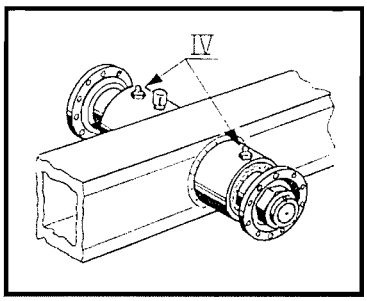

Cardan shaft intermediate bearing

I = Oil fill plug
II = Oil level control plug
III = Oil drain plug
IV = Grease nipple

Lubrication points

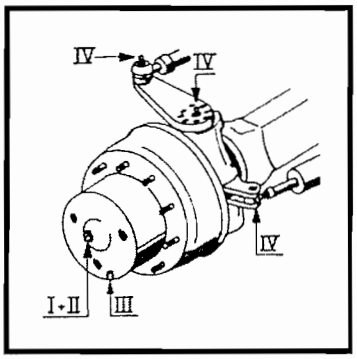

Hub assembly with planetary gear drive

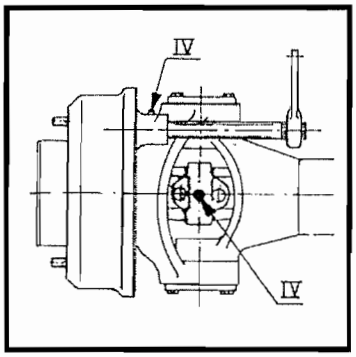

Lubrication points at universal joint and brake shaft.
(If not maintenance - free)

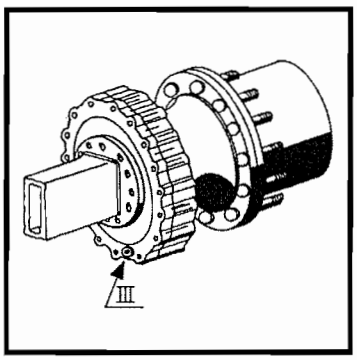

Hub assembly with wet disc brake

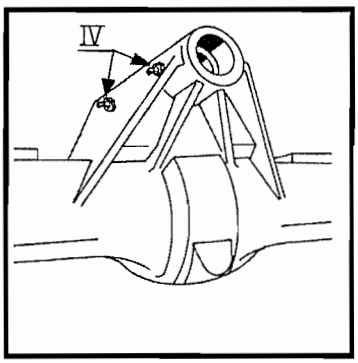

Tumbler bearing

I = Oil fill plug
II = Oil level control plug
III = Oil drain plug
IV = Grease nipple

Lubricants and lubrication intervals

Lubrication point	Lubricant	Remarks	Lubrication intervals 1.)				
			after 100Bh 1000Km	every 500Bh 5000Km	every 1000Bh 10000Km	min. 1x Year	min. 1x in 2 Years
Drive assembly	Hypoid – gear oil per MIL-L – 2105 B / API GL 5 Hypoid – gear oil in multi – range characteristic per MIL-L – 2105 C / D / API GL 5 SAE 90 or multi grade oils for normal external temperature SAE 75 W – 90; SAE 75 W – 85 for external temperature lower – 10°C SAE 140 or multi grade oils for external temperature over + 30°C	Oilchange Check oil level at control points monthly	⊕		⊕	⊕	
Wheel hub planetary gear drive			⊕		⊕	⊕	
Interaxle differential			⊕		⊕	⊕	
Drop gear/ Gear boxes			⊕		⊕	⊕	
Wheel bearing oil lubricated			⊕		⊕	⊕	
Multi disk parking brake	Hydraulicoil ISO VG 32	Oilchange wet running	⊕		⊕	⊕	
Steering knuckle bearing	Multi – use grease lithium saponified groove penetration per NLGI 2 f. e. Fuchs Renolit MP 150		⊕	⊕			
Steering knuckle bearing		maintenance reduced			⊕	⊕	
Universal joint		if provided for	⊕	⊕			
Track rod		if provided for	⊕	⊕			
Steering cylinder -ball head/ -spherical plain bearing		if provided for	⊕	⊕			
Cardan shaft intermediate bearing		if provided for			⊕	⊕	
pinion bearing		if grease lubricated	⊕		⊕	⊕	
Brake shaft bearing		Attention! 2.)	⊕	⊕			
Brake shoe bearing		Attention! 2.)	Lightly greased at brake shoe new assembly				
Wheel bearing		if grease lubricated	Change grease at wheel hub disassembly				⊕
Wet disc brake	see chapter -7-	**external cooled** oilchange	dependent on tank volume / cooling system / operation conditions				
		not external cooled oilchange	⊕		⊕	⊕	

(Bh = Hours of operation)

1.) Whichever occurs first.
2.) The bearing point is to be lightly lubricated only, to avoid the penetration of grease in the interior of the brake (use only hand operated grease gun and remove surplus grease!). Check regularly the brake shafts and if need correct the lubrication intervals (danger of overheating!)

Recomendable hypoid gear oils corresp. MIL-L 2105 B/API GL 5 resp. MIL-L 2105 C/D/API GL 5

ARAL - Gearoil Hyp 90

AVIA - Gearoil Hypoid 90 EP

BP - Multiuse - Gearoil EP SAE 90

ELF - Tranself Typ B 90 / Tranself Typ B 80 W - 90

ESSO - Gearoil GX - D 90

FINA - Pontonic MP SAE 85 W - 90

FUCHS - Renogear Hypoid 90

MOBIL - HD 90 - A

SHELL - Spirax MB 90 / HD 90

TEXACO - Multigear EP SAE 85 W / 90

AGIP - Rotra MP / Rotra MP DB

On no account use “normal” gear oils!

General maintenance instructions

Check - and maintenance points	Remarks	Maintenance intervals 1.)				
		after 50Bh 500Km	after 100Bh 1000Km	every 500Bh 5000Km	every 1000Bh 10000Km	min. 1x Year
Wheel bearing	Inspect, if necessary readjust wheel bearing		⊕			⊕
Wheel nuts	Check and tighten with a torque wrench (after tire change after 50km and 200km)	⊕	⊕	⊕		
Castle nuts/track rod Screws/drive flange Nuts/axle mounting bolts	Check and retighten (Verify the adjustment)	⊕	⊕	⊕		⊕
Brakes (see also chapter 7)	Check lining wear, if necessary readjust, control the proper operation of the brake shafts	⊕	monthly			
NLB	Check lining wear					⊕
NLB - spring load design	Check lining wear				⊕	
Steering - and trackrod lever	Check and retighten mounting bolts *)		⊕			⊕
Bolted connections (f. e. drive assembly)	Check from time to time			⊕		
Ring gear support bolt on drive assembly	Readjust (if necessary)					⊕
Seals	Check from time to time	monthly				
Differential lock	Check function and the automatic return in original position	monthly				

(Bh = Hours of operation)

*) If the bolts are moving (Loctite brakes loose), the lever has to be mounted once more.

1.) Whichever occurs first.

• General assembly /disassembly instructions
• service tools

General instructions for correct assembly and disassembly

- The assembly is to be accomplished only by trained personnel.
- The disassembly can be made reverse to the respective assembly instruction.
- Drain oil before removing, check for presence of metal particles.
- Mark the parts to each other before dismantle.
- Never use a hard objekt to separate tightly fitted assemblies. To remove bearings, drive flanges and similair parts, use the proper pullers.
- It is recommended that the special tools according 3.6 used for disassembly.
- Do not place parts on a dirty surface.
- Systematically replace used seals, O - rings and if need bearings on disassembly.
- Clean parts before reassembly.
- Replace or clean corroded parts.
- The cages of bearings rotating in oil are to be coated with oil at reassembly.
- Seal ring treads on flanges, shafts etc. must be preserved with Castrol Rustilo DWX 32 before mounting.
- Oil seal rings and particularly the anti - dust lip seals must be filled with grease.
- The universal joint shafts and the axle shafts must not be force mounted (they must slide).
- At mounting of radial seal rings pay attention that there is suffice overlap to the housing bores. Pay attention for a plain alignment of the radial seal ring. The seal lips always must not be contacted with Loctite!
- The bolted or keyed assemblies safeties are to be checked according to instructions; in case of doubt, consult Kessler & Co.
- Refill the oil after assembly!
- Repair weldment is only allowed after consultation with Kessler & Co!

Using of Loctite and operating supplies

	Type	Colour	Application
1. LOCTITE	243	blue	Lightly locked screws
	262	red	Middle locked screws
	270	green	Highly locked screws
	270	green	Increased coefficient of friction in contact surfaces
	510	orange	Surface gasket
	572	white	Special gasket
	638	light-green	Glueing with big width of slit
2. EPPLE	33	grey	Surface gasket
3. DIRKO		grey	Elastic gasket

Remarks for working up Loctite and operating supplies

- Threads and surfaces have to be cleaned and free from colour, oil and grease before applying Loctite.
- Loctite will harden under following conditions:
  - Exclusion of air
  - Metal contact
  - Increased temperature
- Pre - assembly and control tightening has to be made in a short time (5 to 10 min.).
- The time between glueing and mounting of the parts should be shorter than 1h.
  Exception: parts made from nonferrous metal have to be glued within one minute.
- Assembled parts must remain unloaded for at least 24 hours.
- **Loctite quantity**
  at screws:

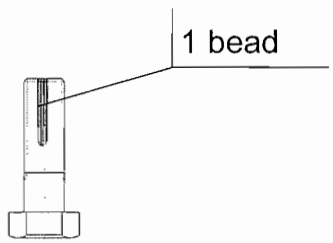

At contact surfaces:

Pay attention for a sufficient Loctite application

Use of Loctite and operating supplies

Hub assembly			
Safety blocked parts	Joint	Loctite	Operating supplies
Spacer ring	Contact surface	572	-
Axle spindle	Screws	262	-
Axle spindle	Contact surface	270	-
Grommet	in planetary housing	270	-
Disc	in axle spindle	270	-
Adjusting screw with nut	in planetary housing	270	-
Support	Screw	262	-
Ring gear retainer	Screws	270	-
Pol wheel	Contact surface	638	-
Steering lever Track rod lever	Screws	262	-
Steering lever Track rod lever	Contact surface	270	-
Wheel hub cover	Thread	572	-
Radial seal rings Rubber casing	Contact surface	572	-
Radial seal rings Steel casing	Contact surface	270	-
Wheel safety nut → see chapter 5 → Adjustment of wheel bearings			

Use of Loctite and operating supplies

Drive assembly			
Safety blocked parts	Joint	Loctite	Operating supplies
Drive flange	Nut surface	-	Epple 33
Diff-housing	Screws	262	-
Shifter cylinder (Diff-lock)	Contact surface	572	-
Diff.carrier (Through drive)	Contact surface	510	-
Drop gear housing	Contact surface	510	-
Diff.carrier	Contact surface	-	Epple 33
Through drive cover	Contact surface	510	-
Differential strap	Screws	262	-
Adjustment nut screw	Screw	270	-
Ring gear	Screws	262	-
Ring gear	Contact surface	270	-
Ring gear support	Cap	270	-
Ring gear support	Thread	-	Epple 33

Tightening torques (Nm)

μ = 0,14

Metric standard thread						
	Screw	Nut	Screw	Nut	Screw	Nut
Thread	8.8	8	10.9	10	12.9	12
M 4	3,0		4,4		5,1	
M 5	5,9		8,7		10	
M 6	10		15		18	
M 8	25		36		43	
M 10	49		72		84	
M 12	85		125		145	
M 14	135		200		235	
M 16	210		310		365	
M 18	300		430		500	
M 20	425		610		710	
M 22	580		830		970	
M 24	730		1050		1220	
M 27	1100		1550		1800	
M 30	1450		2100		2450	
Metric fine pitch thread						
	Screw	Nut	Screw	Nut	Screw	Nut
Thread	8.8	8	10.9	10	12.9	12
M 8 x 1	27		39		46	
M 10 x 1	55		81		95	
M 10 x 1,25	52		76		90	
M 12 x 1,25	93		135		160	
M 12 x 1,5	89		130		155	
M 14 x 1,5	145		215		255	
M 16 x 1,5	225		330		390	
M 18 x 1,5	340		485		570	
M 20 x 1,5	475		680		790	
M 22 x 1,5	650		920		1050	
Brake caliper dowel screws (greased!)						
M 20 x 1,5	400 + 100					
M 27 x 2	900 + 100					
Nut for steering stop = 300 Nm						

Regard reduced tightening torque for galvanized bolts and nuts!

Tightening torques of wheel nuts

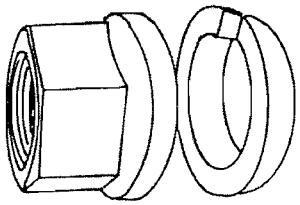	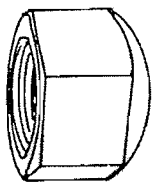	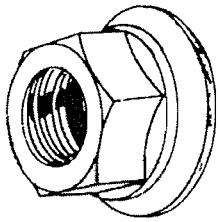
Wheel nut with spring lock washer	Wheel nut with clamp (for clamp fixation)	Wheel nut with thrust collar (for rims with centerring)

Wheel nut with spring lock washer		
Dimensions	Phosphourus darkened	Galvanized
M 18 x 1,5	270 Nm	250 Nm
M 22 x 1,5	450 Nm	350 Nm

Wheel nut with thrust collar		
Dimensions	Phosphourus darkened	
M 22 x 1,5	650 Nm	

Wheel nut with clamp		
Dimensions	Galvanized	
M 18 x 2	350 Nm	

Tightening torques for castle nuts and adjusting nuts

Tightening torques for castle nuts on ball joints for track rods and ram cylinders

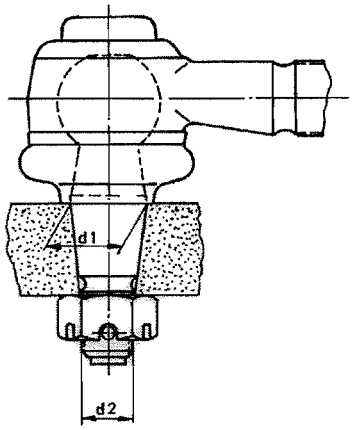

Cone size d1 (mm)	Thread d2 (mm)	Torque (Nm)
26	M 20 x 1,5	200 - 220
30	M 24 x 1,5	280 - 300
32	M 27 x 1,5	290 - 320
38	M 30 x 1,5	340 - 360
45	M 39 x 1,5	410 - 430

The tightening torques of the different thread dimensions of the joints are applicable for nuts of quality S6.

Tightening torque of the adjusting nut resp. slotted nut at flanges resp. gearwheels ect.

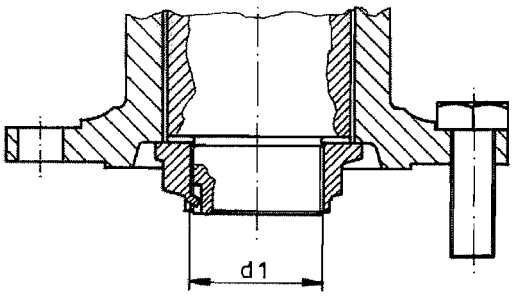

Thread d1 (mm)	Torque (Nm)
M 24 x 1,5	360
M 30 x 1,5	450
M 36 x 1,5	540
M 42 x 1,5	850
M 45 x 1,5	850
M 48 x 1,5	850
M 52 x 1,5	950
M 64 x 1,5	1050 - 1100

Service tools

When ordering service tools please provide order number (installation drawing no.), resp. fabrication number → see identification plate. (The illustrations are not binding for the design).

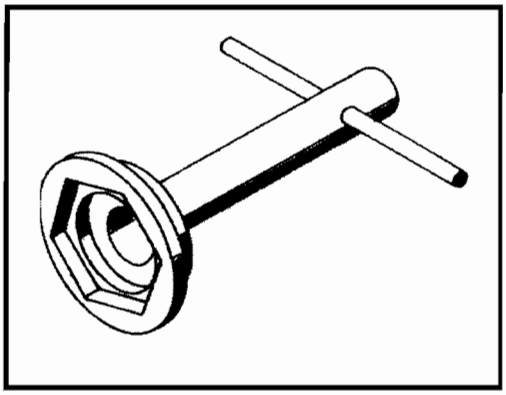

Spanner for wheel safety nut

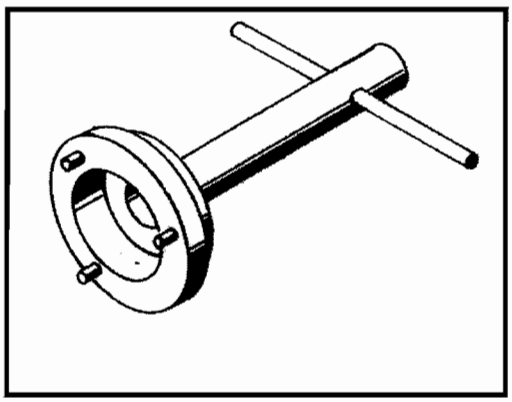

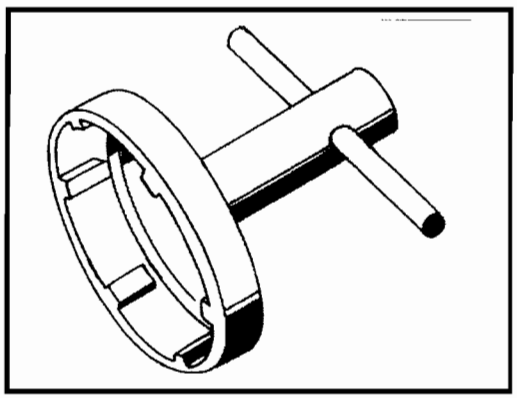

Spanner for splined nut (hub assembly)

Service tools

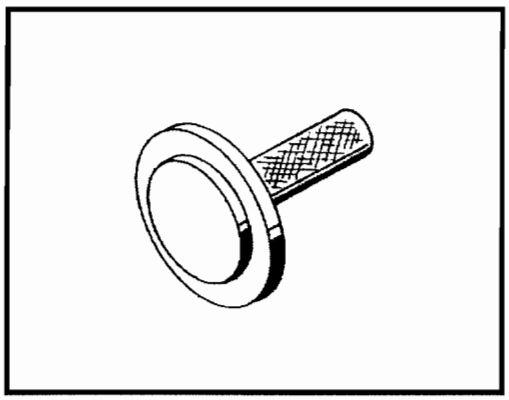

Seal ring sleeve driver

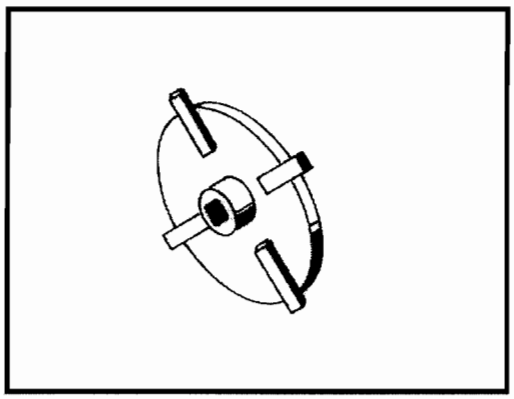

Spanner for thread rings
(Differential bearing)

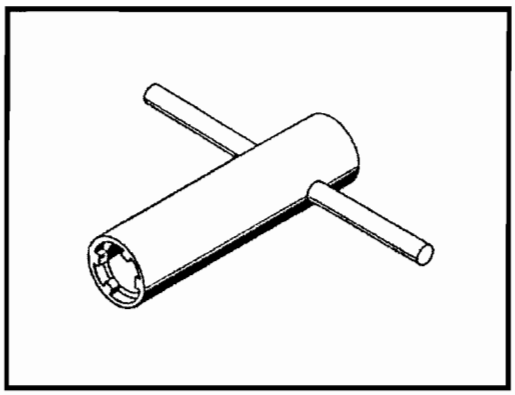

Spanner for counter nut
(Planetary gear drive)

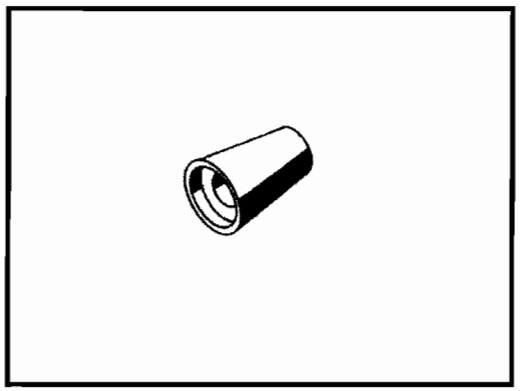

Assembly cone for o - ring
(Differential lock)

Service tools

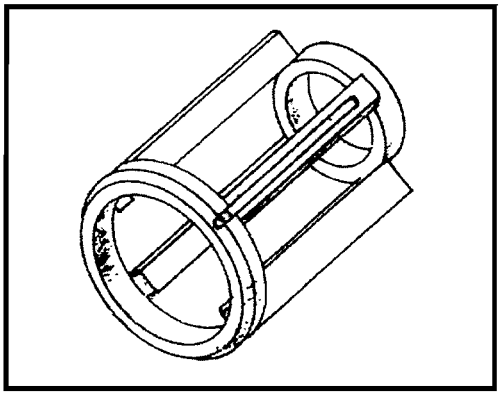

Centering tool for discs

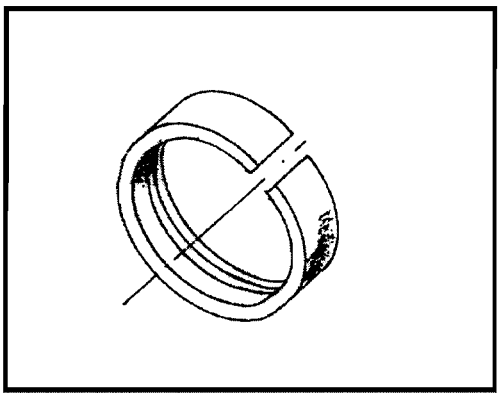

Installation tool for face seal

Assembly of drive assembly

Adjustment of gear meshing of Gleason gears

It is only possible to achieve a perfect gear meshing, if the fabrication number of the drive pinion (marked on the end face) and the ring gear (marked on the circumference) are corresponding.

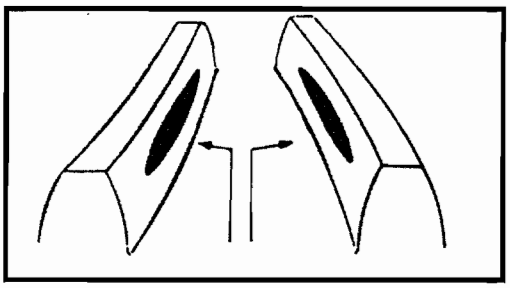

Perfect marking.

The following figures show improper gear meshing marks of the ring gear. The text alongside gives the corrections to obtain correct gear meshing. The dark colored arrows in the sketch of the drive pinion and ring gear indicate the direction towards which the drive pinion has to be moved. The clear arrows indicate the direction towards which the ring gear has to be moved, to get further more a correct backlash.

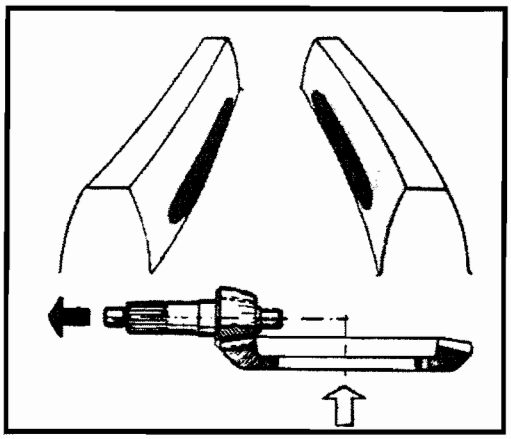

Gear meshing too deep.

Increase the drive pinion distance by correction of the adjustment disc thickness.

Regulate the backlash by inwards moving of the ring gear.

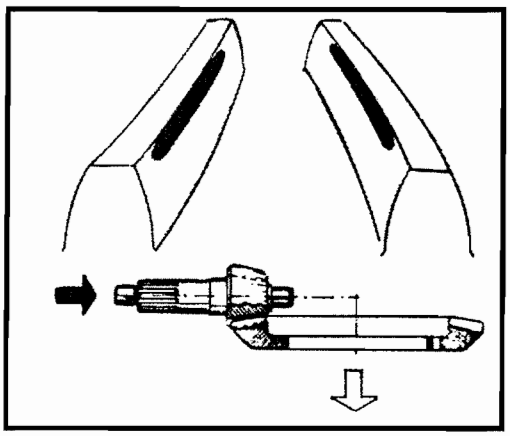

Gear meshing too high.

Decrease the drive pinion distance by correction of the adjustment disc thickness.

Regulate the backlash by outwards moving of the ring gear.

Securing of the striking nut

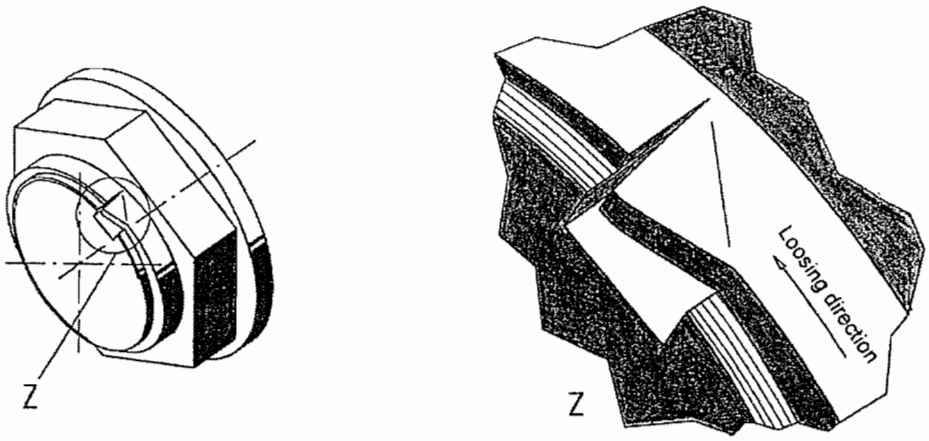

The brim of the striking nut has to be sheared only along the slot flank and the corner has to be bended on the slot ground.

Use of Loctite and other operating supplies

1. **Striking nut at drive flange**
   - In thread: assembly paste with MoS_2 (exception: through drive pinion see point 2).
   - Front side contact surface: sealing compound (Epple 33 or equivalent).
2. **Striking nut at through drive pinion**
   - In thread: Loctite 262.
3. **Striking nut at gear wheels, bearings etc.**
   - In thread: assembly paste with MoS_2.

Removing of the striking nut

Bend away the nose and screw the nut off.

Drive assembly D 109

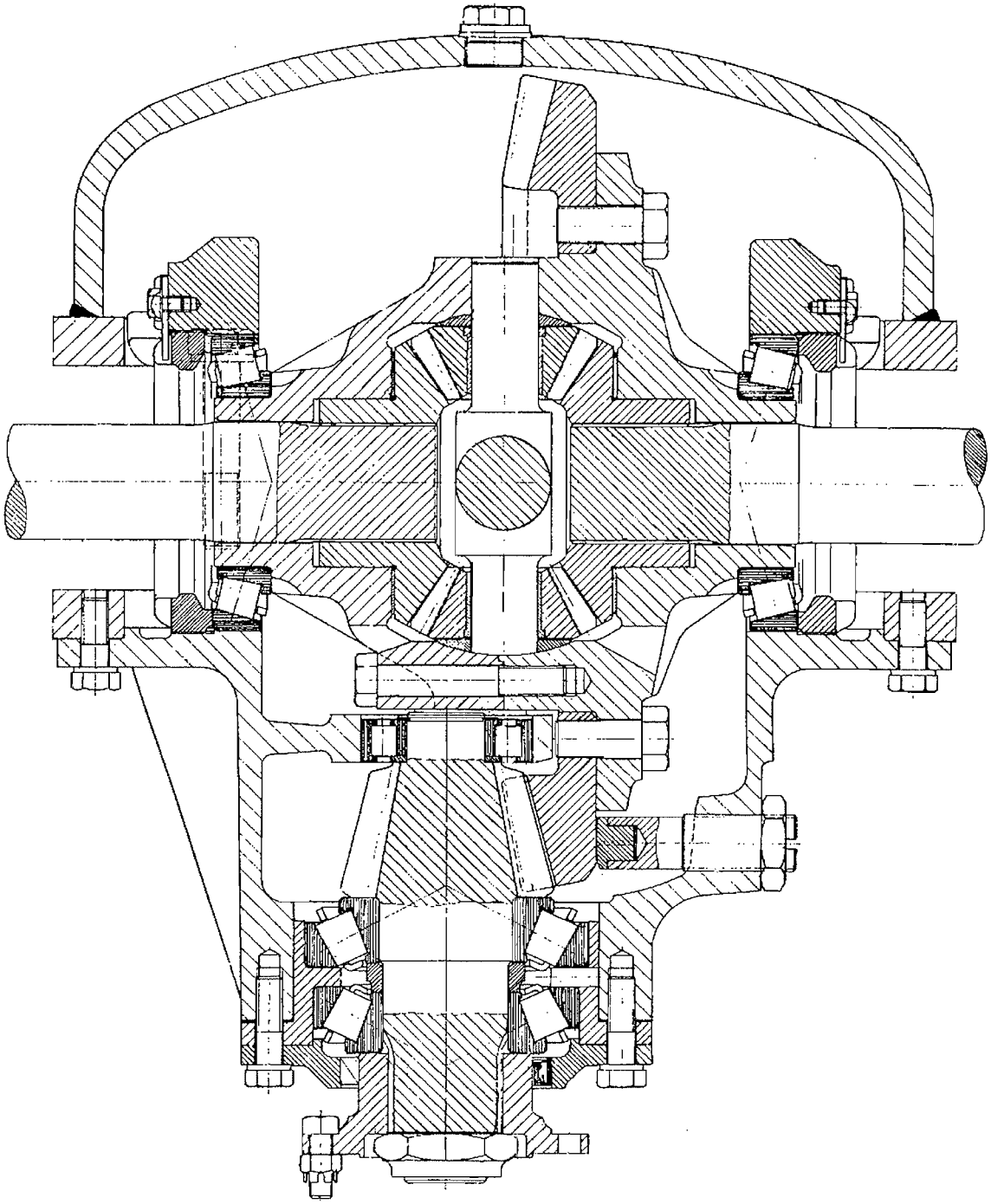

Assembly of the drive pinion bearing

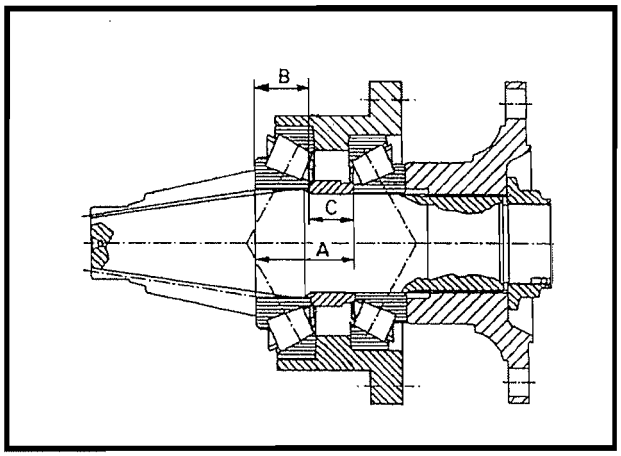

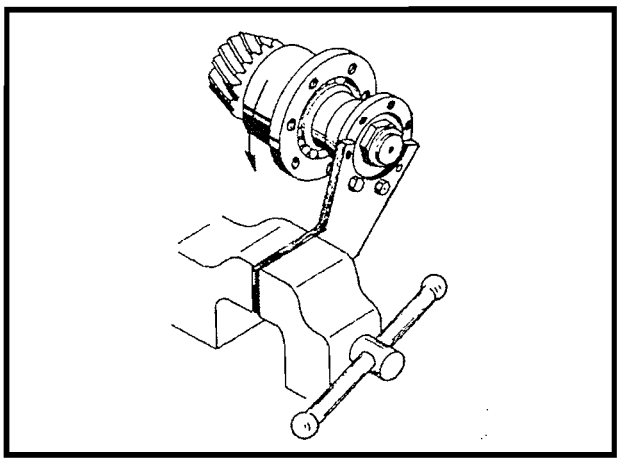

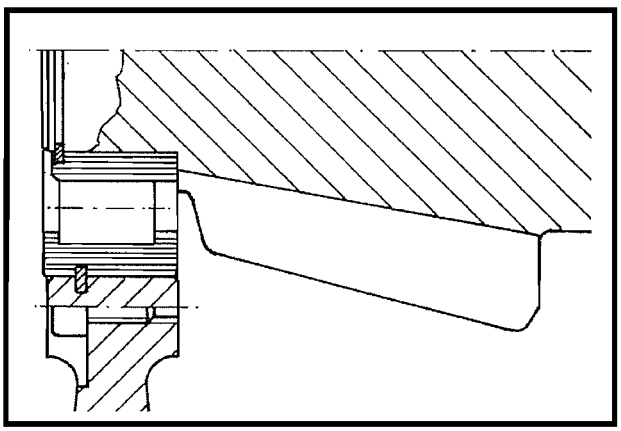

Pinion nose bearing version 2

1. **a.)** Install the disc of the cylindrical roller bearing on the stud of the drive pinion. Heat the cylindrical roller bearing to about 100°C and install it on the stud of the drive pinion. (Drive on completely after it cools). Install the circlip into the slot of the drive pinion stud.
   b.) Pinion nose bearing version 2:
   Heat the cylindrical roller bearing inner ring to about 100°C and install it on the stud of the drive pinion. (Drive on completely after it cools). Install the circlip into the slot of the drive pinion stud. Install the circlip into the slot of the differential carrier and stretch it up, install the cylindrical roller bearing outer ring thereby note the alignment of the slots in the differential carrier and cylindrical roller bearing. Install the circlip, screw in the cheese head screw, secure with Loctite 270.
2. Insert the two outer rings of the taper roller bearings into the pinion housing.
3. Calculate the thickness C of the spacer bushing.
   a) Place the two inner rings of the taper roller bearings in their outer rings. Measure A or C.
   b) Measure the dimension B of the taper roller bearing.
   c) Thickness of the spacer bushing C = A - B.
4. Heat the drive pinion side taper roller bearing to about 100°C and install it on the drive pinion shaft. (Drive on completely after it cools).
5. Install the spacer bushing on the pinion shaft.
6. Install the pinion housing onto the drive pinion. Heat the taper roller bearing inner ring at undersize to about 100°C and install it with a tube onto the drive pinion shaft.
7. Install the drive flange onto the drive pinion shaft. Tighten the safety nut by turning the pinion housing according to sheet 3.5. For tightening, place the drive pinion in a vice using soft jaws or clamp the drive flange with the fork support in the vice.

Assembly of the drive pinion bearing

8. Measure the roll resistance of the bearings by using a torque wrench. If the measured value is not prescribed 0,8 to 1,2 Nm, adjust the resistance by modification of the thickness of the spacer bushing. After arriving at the adjustment of the bearing, back - off the safety nut and draw off the drive flange.

9. Install the radial seal ring with Loctite 572 applied into the cover. Coat the contact surface of the cover with sealing compound and install the cover. Note the position of the oil circulation and return holes. Fill the radial seal ring with bearing grease. Slip on the drive flange, screw on the safety nut with sealing compound between the contact surfaces. Tighten the safety nut according to sheet 3.5. Lock the nut by striking the nut brim into the slot of the pinion.

   Attention: At version with parking brake where the outer diameter of the drive flange is bigger than the inner diameter of the brake carrier don't coat the contact surfaces and don't secure the nut by striking! → For mounting of the brake carrier, the drive flange must be disassembled once more.

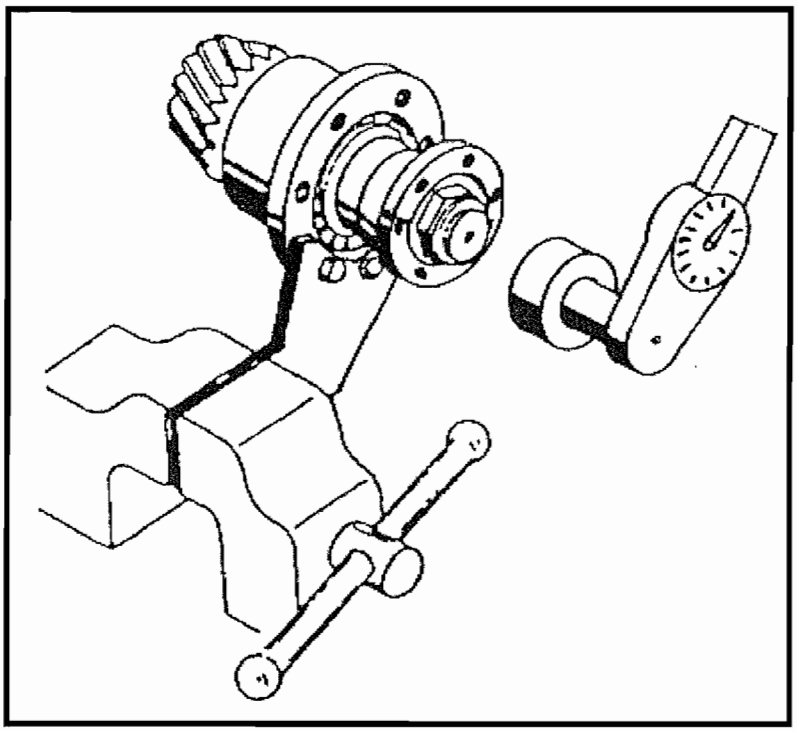

Adjustment of gear meshing

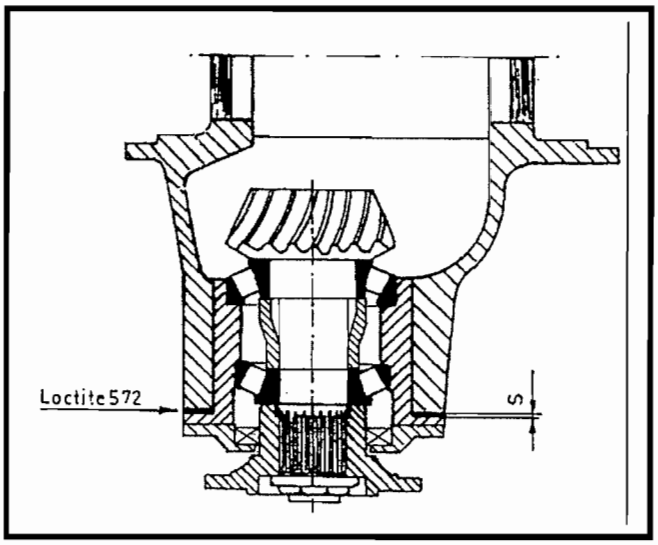

Set the complete mounted drive pinion into the differential carrier and bolt it.

Ascertaining of the thickness S of the adjustment discs:

To obtain the proper tooth flank contact according sheet "adjustment of gear meshing of Gleason gears", adjust the axial position of the drive pinion with the thickness of the adjustment discs. The necessary thickness of the adjustment discs can be obtained by successive trials.

(For this operation the differential has to be mounted onto the differential carrier → see sheet "assembly of drive assembly").

After the adjustment of gear meshing bolt the cover and the pinion housing onto the differential carrier, seal the pinion housing with Loctite 572.

At version with parking brake fit the carrier of the parking brake and bolt it with the cover and the pinion housing onto the differential carrier, seal the pinion housing with Loctite 572.

At version where the outer diameter of the drive flange is bigger than the inner diameter of the brake carrier the drive flange has to be disassembled once more. After installing of the brake carrier mount the drive flange and the safety nut according to "assembly of the drive pinion bearing".

Assembly of the Differential

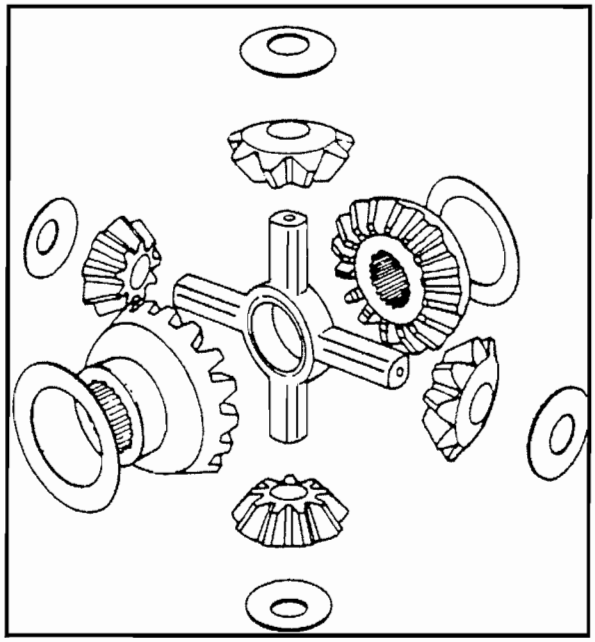

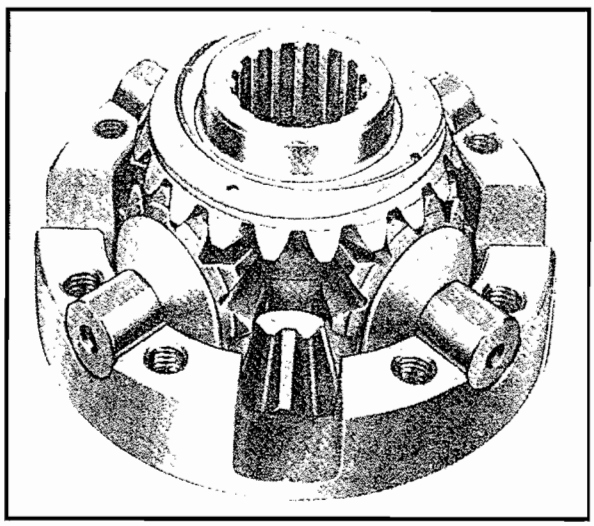

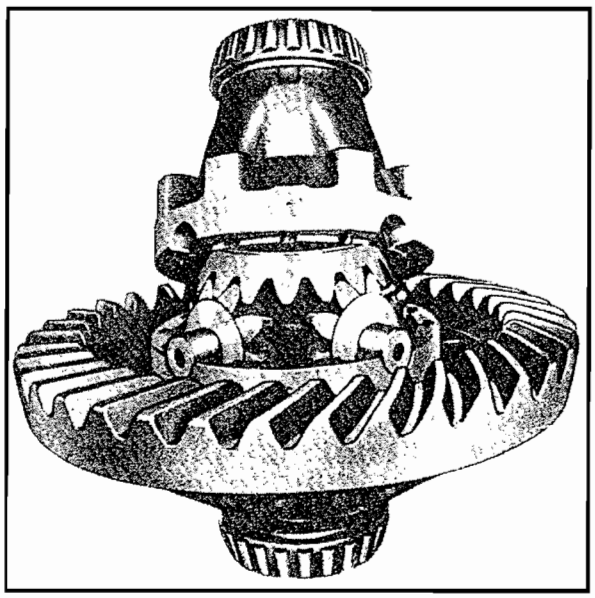

Before assembly all of the bevel gears and the thrust rings should be well oiled.

1. Place one differential side gear with the side gear thrust washer in the differential case.
2. Install the spider with differential gears and differential pinion thrust washers in the differential case.
3. Install the other differential side gear and side gear thrust washer. (At variants with Nospin differential install the Nospin diff. instead of the differential gears)
4. Install the other half of the differential case over the assembly and observe the alignment marks, tighten the differential case bolts. Secure with Loctite 262.
5. Check that all differential pinions can rotate easily.
6. Coat the contact surface of the ring gear with Loctite 270 and install the ring gear on the differential case by tapping lightly on the circumference. Tighten the ring gear bolts. Secure with Loctite 262.
7. Heat the two taper roller bearings to about 100°C and install them by using a sleeve.

Assembly of drive assembly

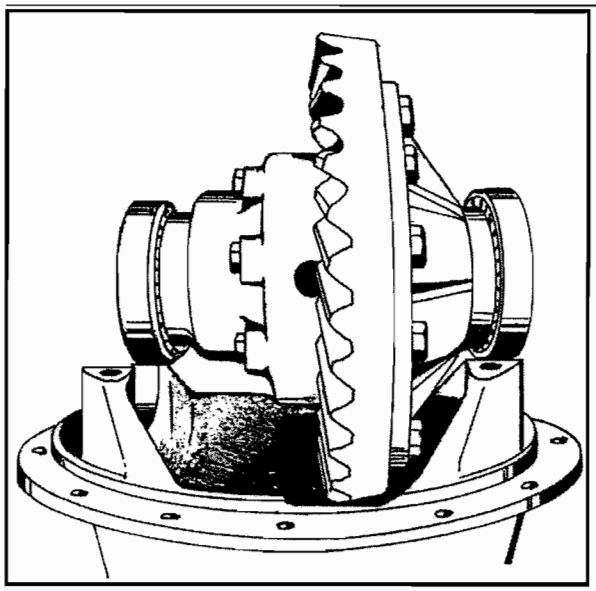

Place the differential with the outer rings of the taper roller bearings on the differential carrier which is in a vertical position, with mounted drive pinion.

Mount the differential straps and align them with the thread rings.

During this operation be careful of the alignment marks on the differential straps with respect to the differential carrier. (Do not interchange the differential straps.)

Tighten the differential strap bolts by hand. By a counter rotation of the two thread rings, move the differential until the backlash is correct. (The smallest admissible value at the closest place is marked on the ring gear).

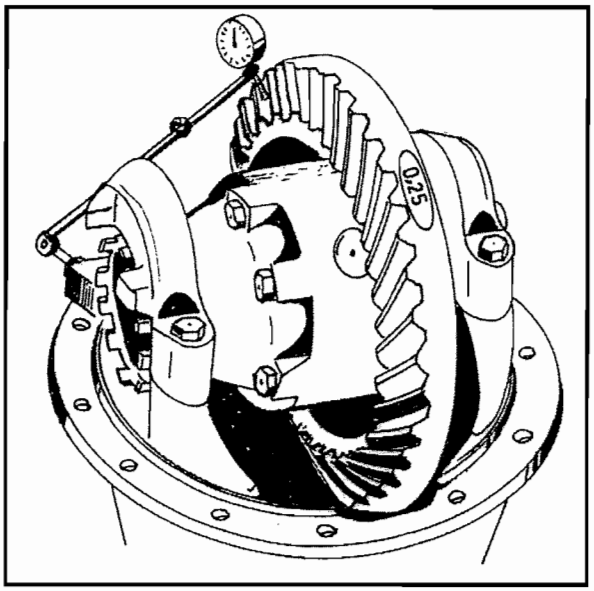

Therefore hold the drive pinion at the drive flange. Check the backlash by careful forwards and rearwards rotating the ring gear. Use a dial indicator.

Measure the backlash during a few times turns of the ring gear and if need correct the backlash, because of the smallest admissible value at the closest place must not be fall short of.

Adjust gear meshing according to sheet “Adjustment of gear meshing of Gleason gears”.

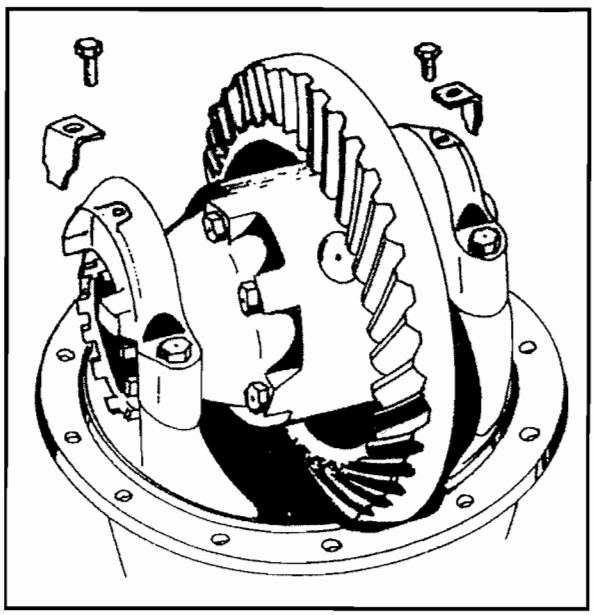

Tighten screws of the differential straps and lock them with Loctite 262.

Adjust the bearing roll resistance trough tightening of the thread rings. Set value: 2,0 to 3,0 Nm. Check the value with a torque wrench. If measuring at the drive pinion / drive flange, take the ratio of the bevel wheel set into account.

Screw the lock plates for the thread rings and secure with Loctite 270, if need bend the lock plates.

Assembly of the ring gear support bolt

1. Glue the cap with Loctite 270 onto the support bolt.
2. Coat the support bolt with Epple 33.
3. Screw the support bolt with cap by hand to contact to the ring gear, without exerting pressure.
4. Screw the counter nut onto the support bolt.
5. Turn back the support bolt max. 15°.
6. Tighten the counter nut, during this operation the support bolt must not move.

   In tightened condition the clearance between the ring gear surface and the contact surface of the support bolt amounts about 0,1 mm.

   Attention:

   The support bolt has to be sealed again when adjusting timely.

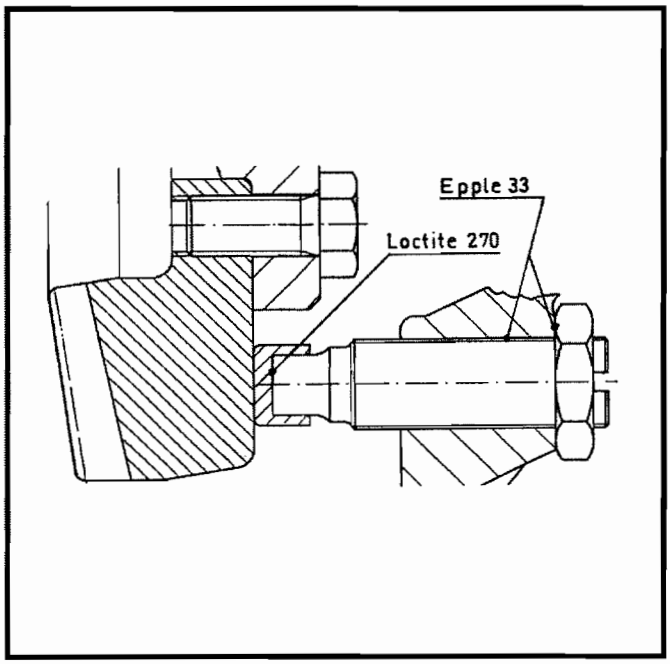

Assembly of the hub assembly

Assembly of the spacer ring

Coat the seat of the spacer ring on the steering knuckle resp. axle spindle with Loctite 572. Heat the spacer ring to about 100°C and push it by gently striking onto the steering knuckle resp. axle spindle. (The steering knuckle resp. axle spindle must be free of corrosion). Oil the seal ring tread onto the spacer ring.

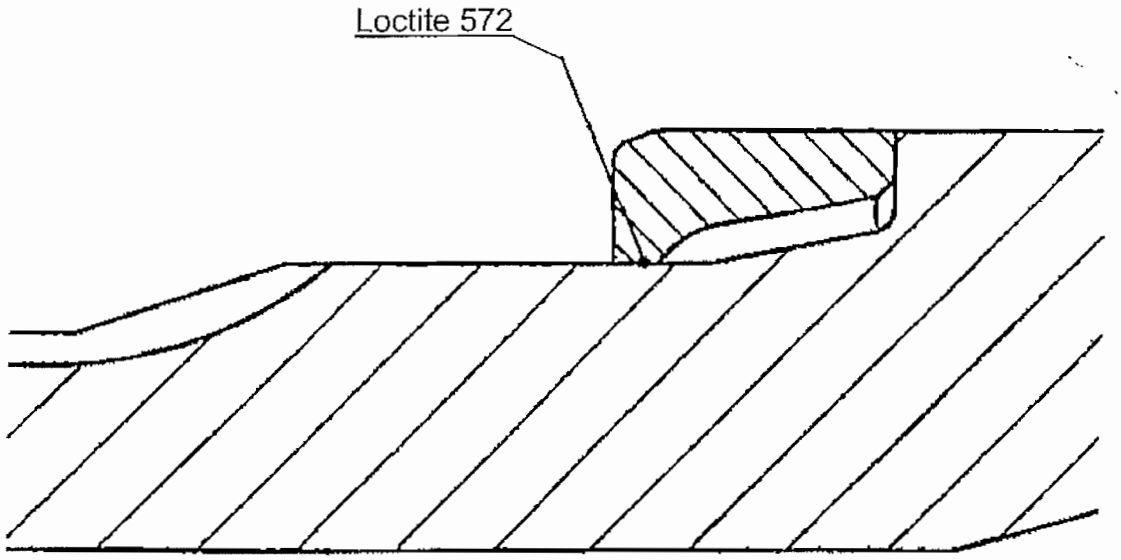

Hub assembly drive axle

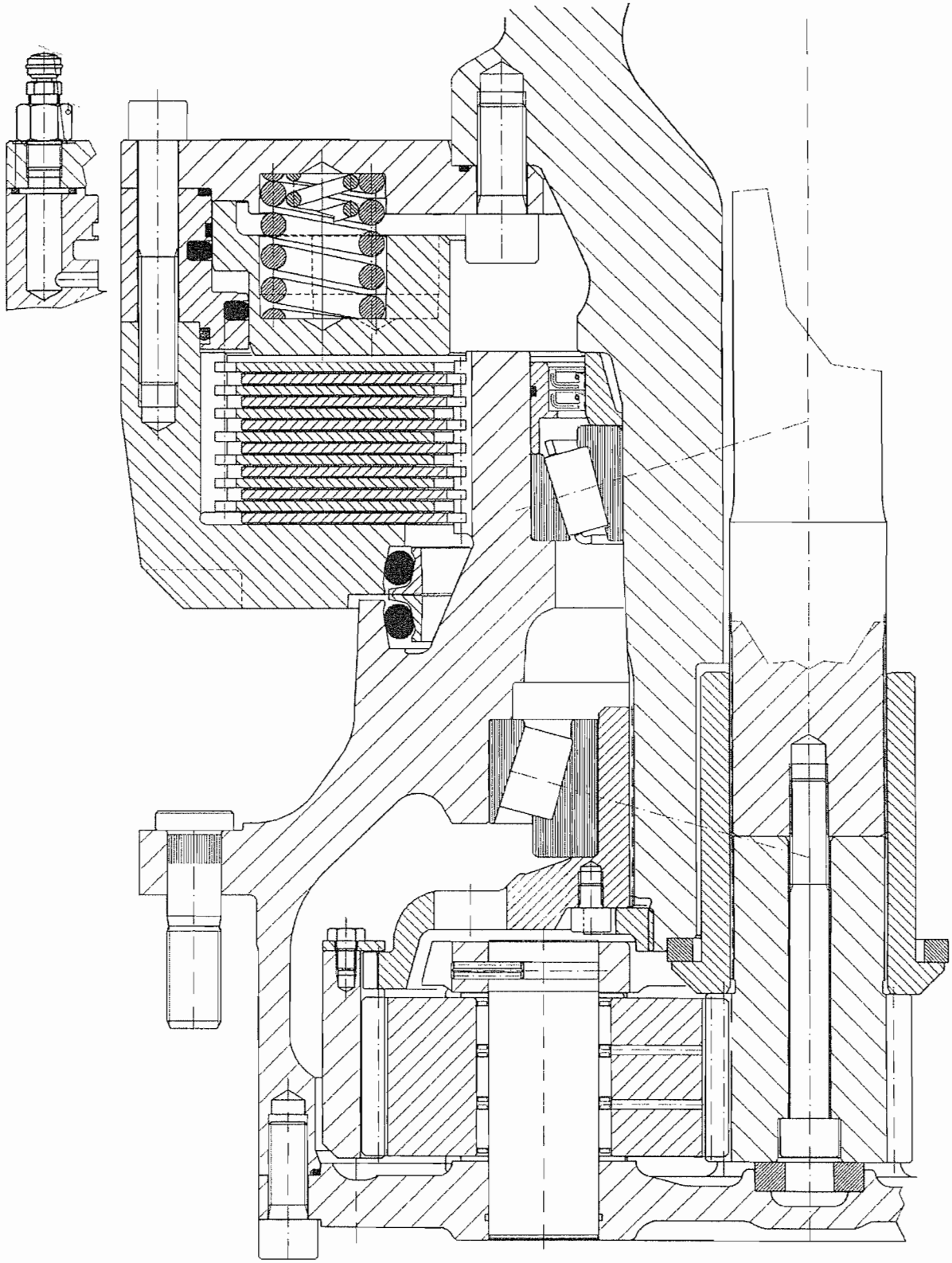

Assembly of the drive axle onto the axle housing

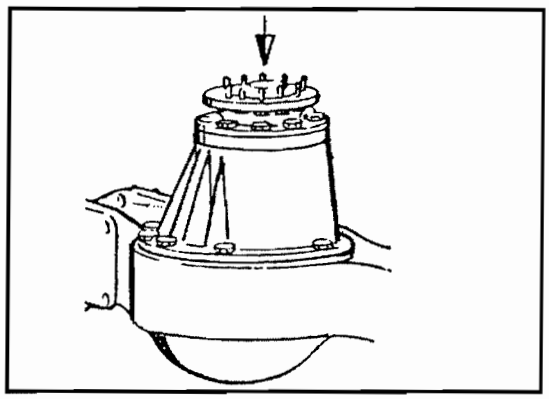

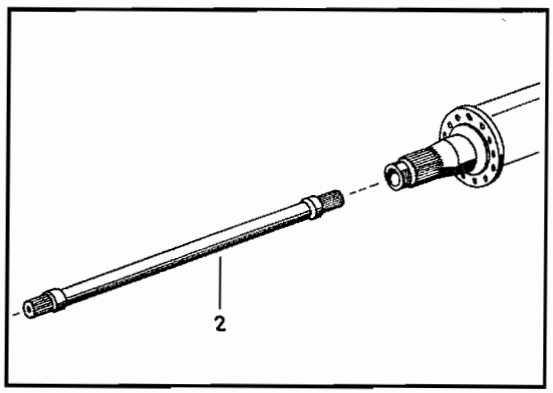

Coat the contact surface of the axle housing with Epple 33 (at version through drive with Loctite 510), and mount the complete drive assembly. The axle housing being placed in a horizontal position, secure the screws with Loctite 262. Mount the pol wheel (if present) onto the axle shaft (see 5.1.7).

Engage the axle shaft into the axle housing.

The axle shaft should be able to be moved easily (by hand) in the toothing of the differential side gear.

At version with differential lock on the outside (D 71/ D 109) the differential lock must always be actuated when assemble or disassemble the axle shaft.

Direction:

Actuating of the differential lock is necessary to prevent the sliding sleeve to drop out of the shifter fork into the axle housing when pulling out or sliding in the axle shaft. This would entail disassembly of the axle.

Assembly of hub assembly

- Assembly of the spacer ring (if present) see sheet 5.1.6.
- Install the brake onto the axle spindle, be careful of the brake control position and bolt it.
  At version with disc brake install the brake carrier (if present), then mount the wheel hub with the brake disc, and after this operation install the brake.
- Prepare and mount the wheel hub see chapter 5.5.
  Attention: Hold the wheel hub with a hoist until the outer bearing with ring gear carrier is mounted.
- Assembly of the planetary gear drive see chapter 6.
- At version with drum brake mount the brake drum.
- Assembly of the ABS - sensor installation (if present) see 5.1.7.

Attention:

At version with ABS resp. ABS - preparation (the pol wheel is mounted onto the axle shaft) the thrust ring of the sun gear in the axle spindle must be dismounted for disassembly the axle shaft.

Prepare and mount wheel hub

Prepare wheel hub

Install the wheel studs (1).

Press in outer rings of taper roller bearings (2 + 3), do not hammer them.

Install inner ring of taper roller bearing (3).

Install the o - ring (4) into the distance ring (5).

Install the distance ring (5) into the wheel hub (6).

Press the radial seal rings (7) with Loctite 572 (rubber cage) resp. Loctite 270 (steel cage) applied into the wheel hub (6). Fill the radial seal rings with bearing grease.

Install the face seal (8) into the wheel hub (6) (see 5.8).

Mount wheel hub

Push the pre - assembled wheel hub (6) parallel onto the axle spindle resp. steering knuckle.

Attention: Be careful not to damage the seal rings (7).

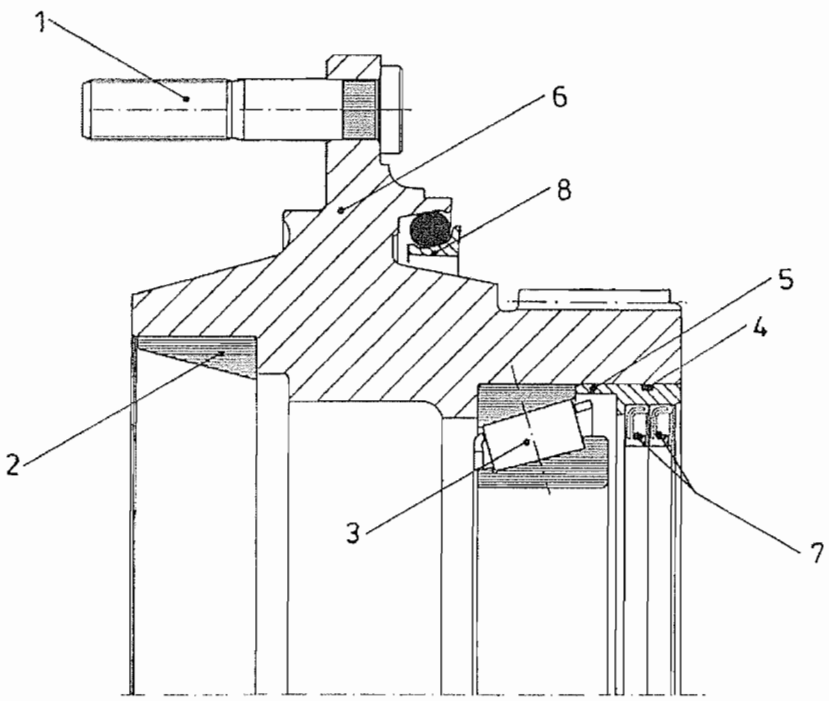

Adjustment of wheel bearings

Tightening torque of the wheel safety nut

series	Nm
41	300
51	350
61	400
71/ 72	400
81/ 82	450
91	500
109	500
116	500
L101	500
L102	550
D/ LT 101/ 102	600-650
106	650-700
111	750
112	1000

Adjusting of wheel bearings

The temperature of the axle parts should be between 0 and + 20°C at the bearing adjustment.

Screw on the wheel safety nut (Loctite- resp. Molykote- using see page 5.7.2) and adjust and secure as following described:

Screw on the wheel safety nut and tighten it with a 1,5 - 2 times higher tightening torque than the finish tightening torque. During the tightening, turn the wheel hub a few times and knock it with a plastic hammer. Untighten the wheel safety nut (about 180° back rotation), then tighten the wheel safety nut to the tightening torque according to the table. At this tightening turn the wheel hub also a few times, if there is no possibility for securing, the wheel safety nut has to be turned back to next securing possibility.

Wheel safety nut

Designation	Version	Security/ Remarks
Shaft nut with cheese head screw	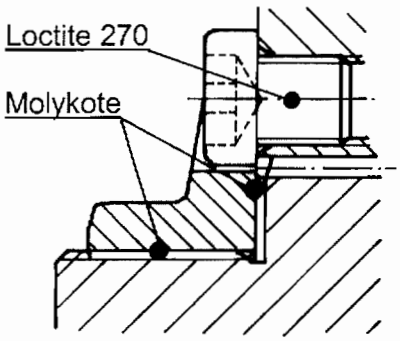	Cheese head screw & Loctite 270
Shaft nut with cheese head screw and bushing	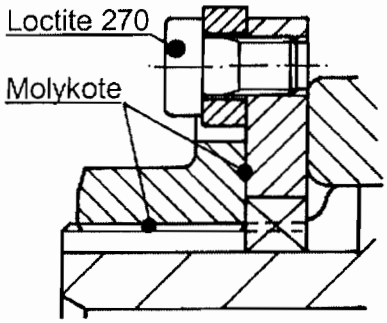	Cheese head screw & Loctite 270
Shaft nut with set screw	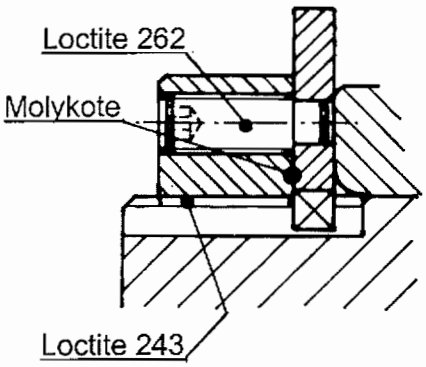	Set screw & Loctite 243/ 262 Back off set screw ½ rotation after tightening
Shaft nut with counter nut	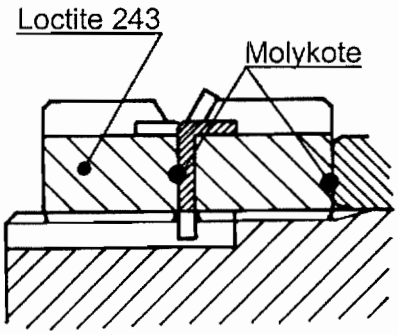	Security spline & counter nut & Loctite 243

Assembly of the face seal

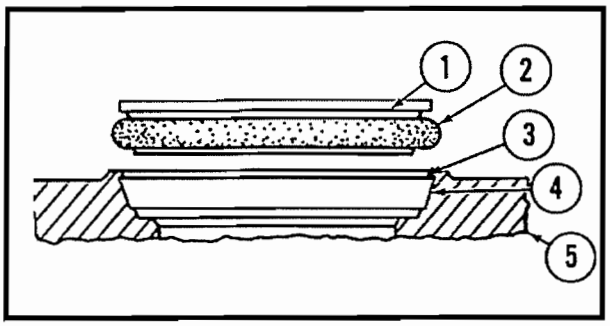

1. Seal ring
2. Rubber toric ring
3. Housing retaining lip
4. Housing ramp
5. Seal ring housing

Seal rings, torics, and housings must be clean and free of any oil film, dust, or other foreign matter. Use a solvent that evaporates quickly, leaves no residue, and is compatible with the rubber toric rings. The recommended solvent is Isopropanol. Ring and housings should be wiped with a solvent - soaked lint free cloth or paper towel.

After all components have been wiped clean, the torics should be installed on the metal seal rings so that they rest in the radius on the tail of the metal ring. Insure that the torics are not twisted by inspecting the mold flash line on the outside diameter of the toric for true circumferential tracking around the seal. Twisted torics will cause nonuniform face load that can result in leckage of lubricant and pumping of debris past the toric. If a twist is apparent, it can be eliminated by gently pulling a section of the toric radially away from the metal seal ring and letting it “snap” back. Repeating this in several places around the ring will eliminate any twist in the toric ring.

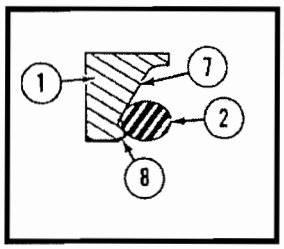

Put the toric ring (2) on seal ring (1), at the bottom of the seal ring ramp (7) and against the retaining lip (8).

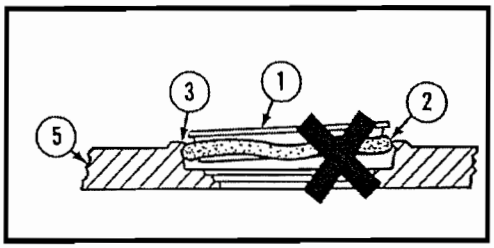

The toric ring (2) can twist if it is not wet all around during installation or if there are burrs of fins on the retaining lip (3) of the housing (5).

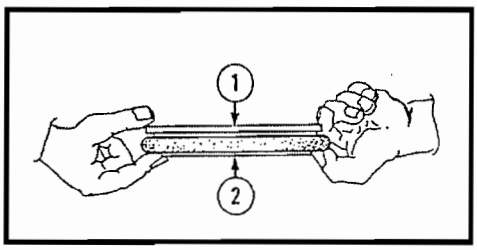

Eliminate toric twist by gently pulling a section of the toric (2) rapidly away from the seal ring (1) and letting it “snap” back.

Assembly of the face seal

Place the installation tool around the seal ring and dip the seal ring into a pan of Isopropanol solvent to lubricate the toric ring. It is essential to lubricate the toric with Isopropanol so that the toric will slip past the housing retaining lip and seal uniformly in the housing nose radius. Insufficient lubrication can cause poor seal performance due to nonuniform loading (twisted torics or cocked seals). Use of solvents other than Isopropanol can leave a residue on the toric or ramps and allow the toric to slide rather than roll in seat. This can also result in poor seal performance due to nonuniform loading.

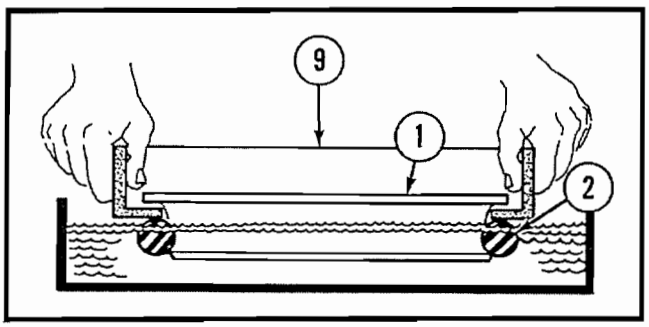

Put the installation tool (9) onto the seal ring (1) with toric ring (2). Lower the rings into a container with Isopropanol until all surfaces of the toric (2) are wet.

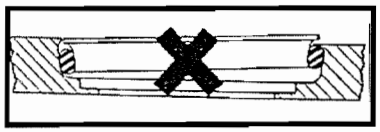

Toric sliding on retainer ramp.

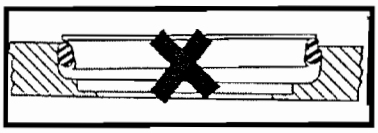

Toric caught on housing retainer lip.

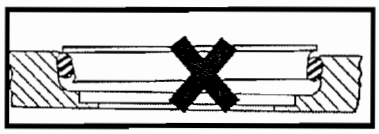

Toric sliding on seal ramp.

After dipping the seal assembly in the solvent, shake the excess solvent from the seal assembly and immediately “pop” the seal into the housing with a firm push of the installation tool. Remove the installation tool and check the seal stantout height at several places around the circumference of the ring to verify an accurate installation. If the seal does not meet the height specification, inspect the toric for twists or obvious bulges.

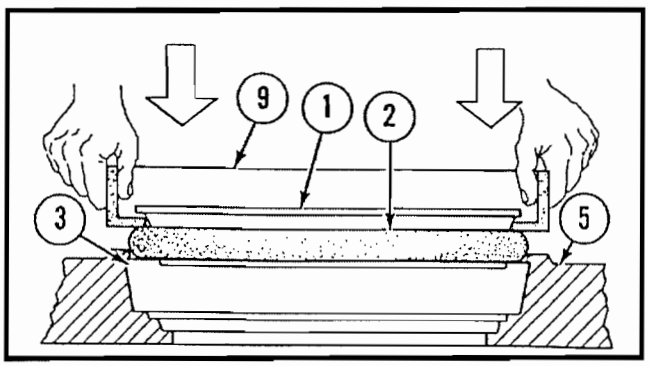

With all surfaces of the toric ring (2) wet with Isopropanol, use the installation tool (9) to position the seal ring (1) and the toric ring (2) squarely against the housing (5) as shown. Use sudden and even pressure to pop (push) the toric ring (2) under the retaining lip (3) of the housing (5).

Assembly of the face seal

The seal can be adjusted by gently pushing the toric into position by hand or by using a fabricated adjustment hook.

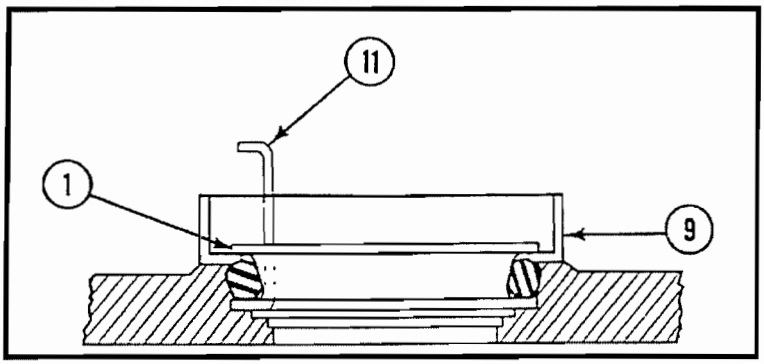

If small adjustments are necessary, do not push directly on the seal ring (1); use the installation tool (9) to push down or the adjustment tool (11) to pull up.

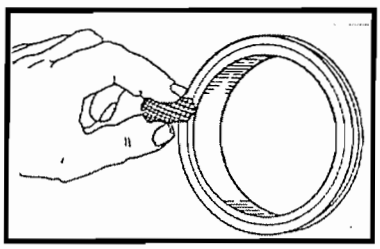

A thin film of light oil should be applied to the seal faces prior to assembly. Use an applicator, a disposable tissue or a clean finger to distribute the oil evenly. Be careful not to get any oil on the rubber toric rings.

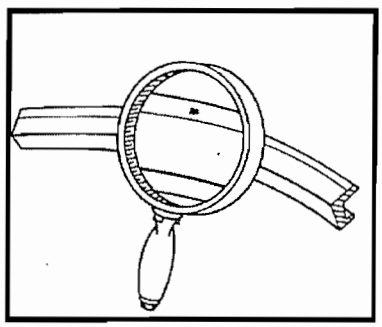

Be sure there is no visible debris on either of the seal faces - even a small piece of lint can hold the seal faces apart and cause leakage.

After successful installation, wait one minute for the Isopropanol to dry before assembling the two seal halves in the final loaded position. This delay is to allow any excess solvent to dry so that the torics roll, rather than slide, in the housing as the faceload is increased. If the torics slide, this can produce a nonuniform load that can result in poor seal performance.

Results of incorrect assembly :

Point “A” and point “B” remain stationary.
Points “X” and “Y” rotate 180°.
This causes high pressure at “A”/ “Y” and possible galling.
When rotated, points “B”/ “X” has low pressure and possible leakage.

Original assembled position

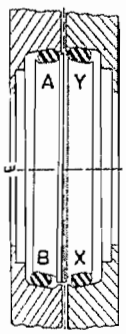

Rotated 180°

Assembly of the face seal

After the unit to be sealed is assembled, a post - assembly leakage test can be performed to insure the seal is properly installed. A vacuum check is recommended rather than a pressure check as vacuum checks are more sensitive. Many users find this an easy check to combine with a vacuum fill technique for the lubricant. It is recommended the compartment be filled to the correct level with lubricant and then rotated slowly several revolutions to seat the seals. A vacuum test will catch big seal damage such as broken seal rings or cut torics that may be caused in the last phases of assembly. The Duo - Cone seal is not designed to seal air, so some leakage can be expect using such a procedure.

Following these guidelines and recommendations should insure optimum performance from the Duo - Cone - seals.

Assembly of planetary gear drive

Planetary gear drive

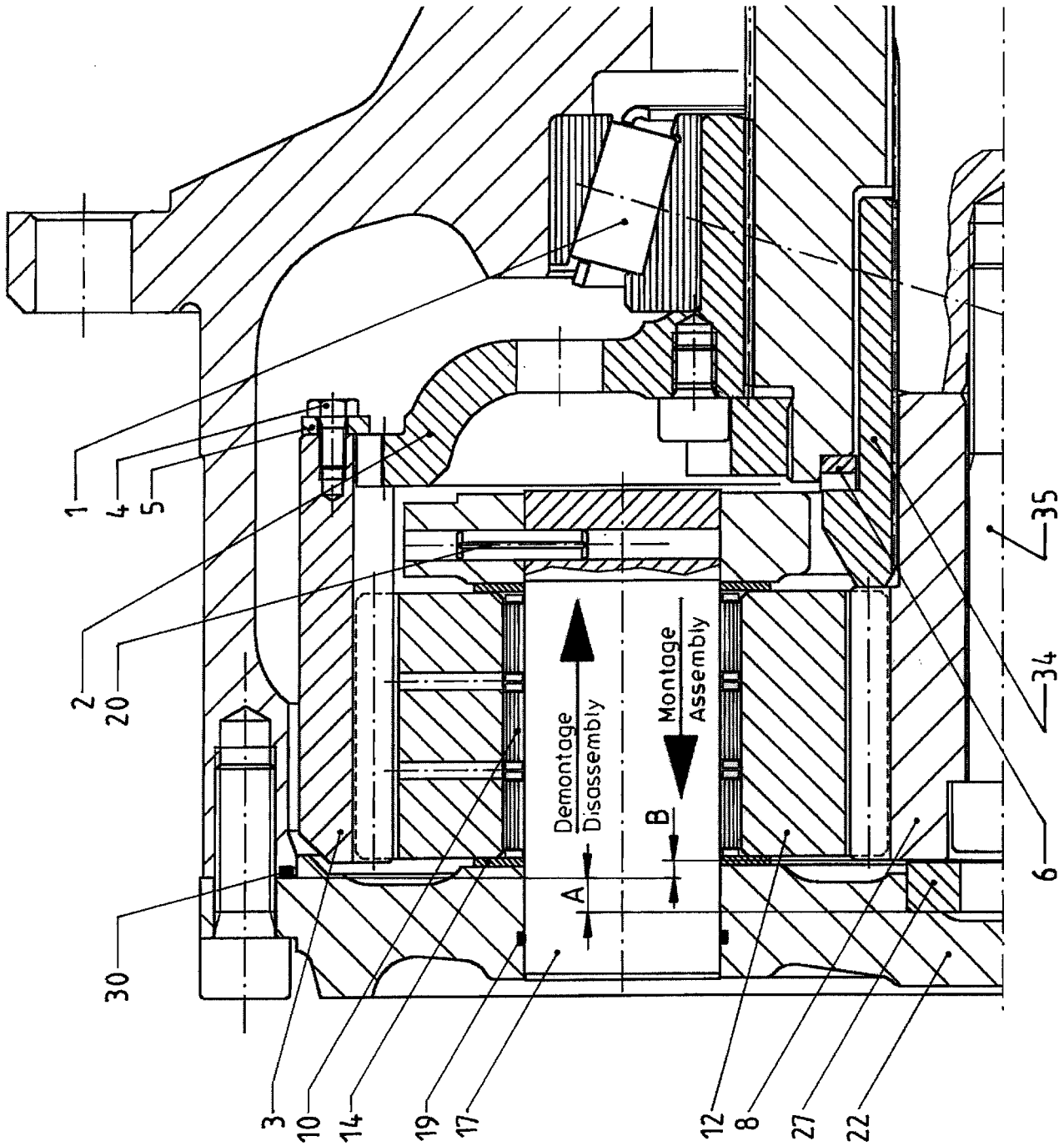

Assembly of the ring gear and ring gear carrier
Assembly of the sun gear

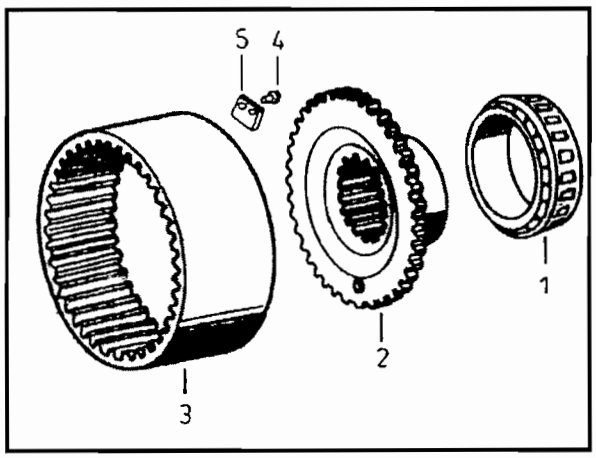

Prepare the ring gear and the ring gear carrier

Heat the taper roller bearing inner ring with cage (1) to about 100°C and install it onto the ring gear carrier (2). Place the ring gear (3) onto the ring gear carrier. Bolt the retainer (5) with the screws (4), secure the screws with Loctite 270.

Assembly of the ring gear carrier

Install the ring gear carrier (2) with ring gear (3) into the wheel hub resp. onto the steering knuckle resp. axle spindle. The oil compensating hole in the ring gear carrier must be on the bottom. Subsequent adjust wheel bearings (see chapter 5.7).

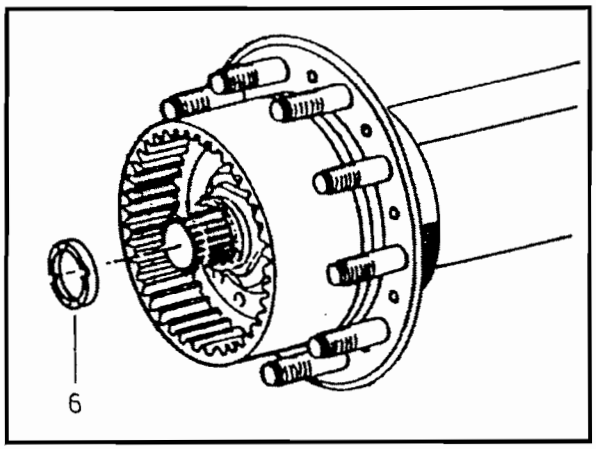

Assembly of the thrust ring

Press the thrust ring (6) into the steering knuckle resp. axle spindle. Secure with Loctite 270.

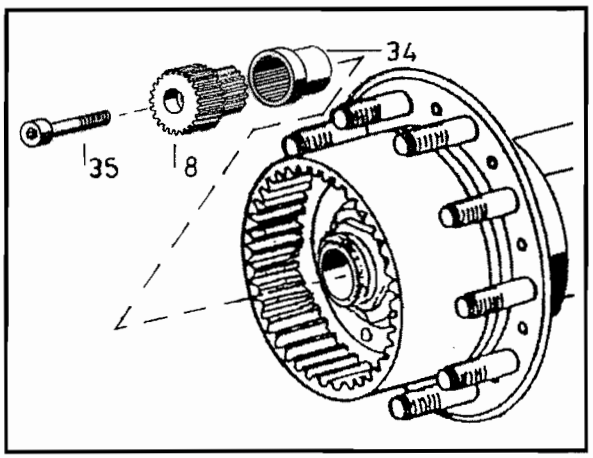

Assembly of the sun gear

Push the sleeve (34) onto the universal joint resp. axle shaft. Introduce the sun gear (8) into the sleeve and bolt it with the screw (35) onto the universal joint resp. axle shaft, secure the screw with Loctite 262. Push the universal joint resp. axle shaft towards the inside until the sun gear contacts to the sleeve and the sleeve contacts to the thrust ring.

Assembly of planetary gear

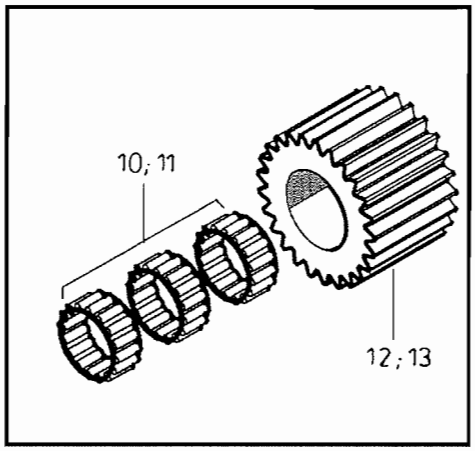

Prepare planetary gear:

Install the needle bearing (10 resp. 11) into the planetary gear (12 resp. 13).

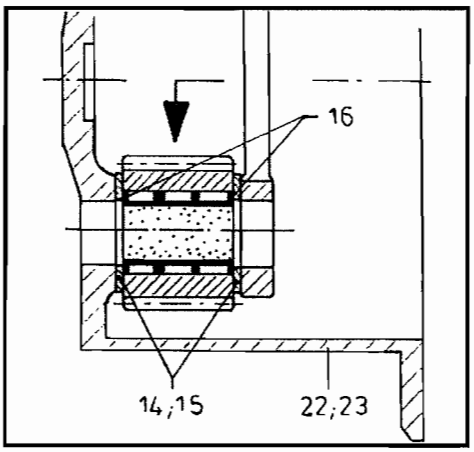

Insert the preassembled planetary gears (12 resp. 13) with needle bearings (10 resp. 11), rings (16) (if present) and thrust discs (14 resp. 15) into the planetary housing (22 resp. 23) (planetary housing in horizontal position).

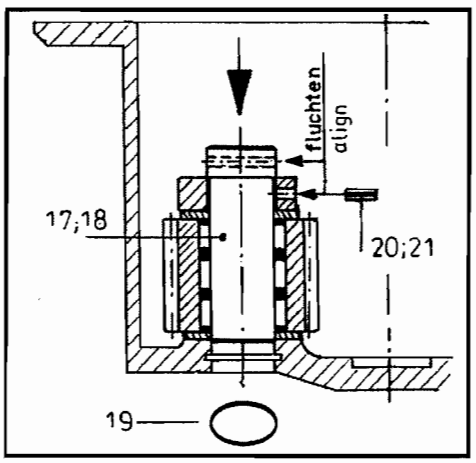

Place o - ring (19) into the slot of the planetary housing (22). Because of the difference of diameter of 0,1 mm press the planetary pin (17 resp. 18) in direction of arrow. Be sure, that the bore hole of the locking pin in the planetary pin and planetary housing are aligned. After inserting, secure the planetary pin with the locking pin (20 resp. 21).

Adjustment of the axial clearance

The axial clearance between sun gear and thrust disc (27) in the planetary housing must be 0,3 - 0,7 mm.

Measure distances:

Dimension A =

Dimension B =

Calculate required thickness, take the axial clearance (0,3 to 0,7 mm) into consideration.

Mount the correctly dimensioned thrust disc (if necessary, make final correction on a lathe) into the planetary housing. Secure with Loctite 270.

Assembly of the planetary housing

Place o - ring (30) into the slot of the planetary housing. Install the preassembled planetary housing and bolt it, secure with Loctite 262.

Disassembly of planetary gear

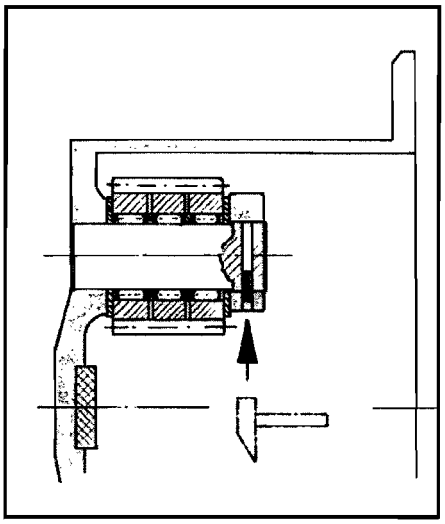

Knock the locking pin (20 resp. 21) completely to the inner side of the planetary pin.

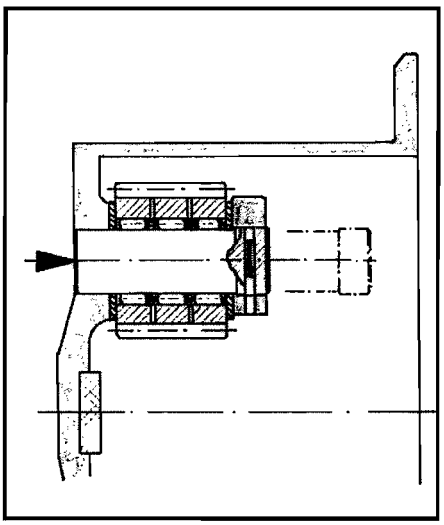

Press the planetary pin in direction of arrow out of the planetary housing.

Attention:

Because of the difference of diameter of 0,1 mm do not press the planetary pin against the direction of arrow out of the planetary housing, to prevent damaging the bore.

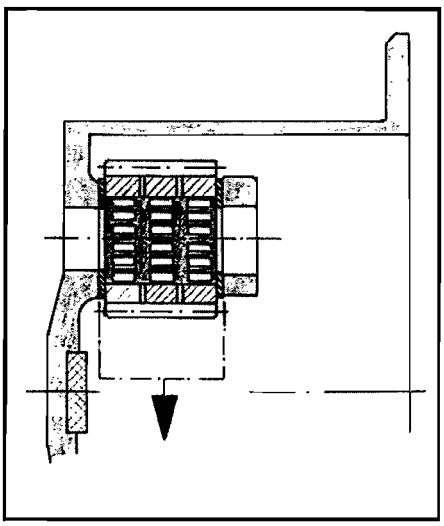

Remove the planetary gears with the thrust discs and needle bearings.

Assembly of service brake

Assembly of the wet disc brake spring load design

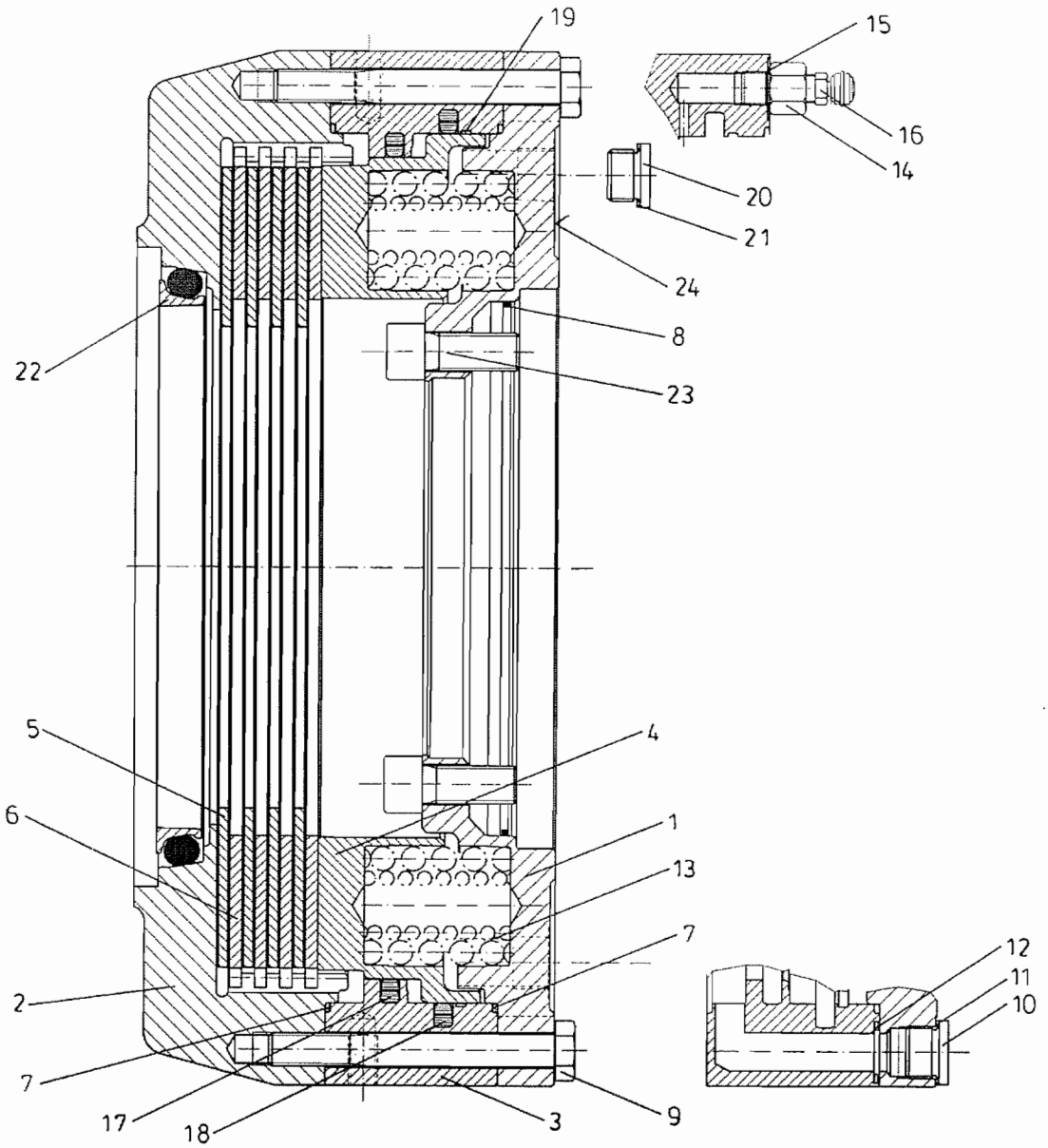

1. Brake carrier
2. Brake housing
3. Intermediate piece
4. Piston
5. Inner disc
6. Outer disc
7. O - ring
8. O - ring
9. Screw
10. Screw plug
11. Seal ring
12. O - ring
13. Spring set
14. Connection piece
15. Seal ring
16. Bleeder valve
17. Sealing set
18. Sealing set
19. Guide ring
20. Screw plug
21. Seal ring
22. Face seal
23. Screw
24. Warning label

WARNING!

Before commencing work on the brake, ensure that no unintended machine movement can happen when the braking effect is removed.
- Danger to life! -

DANGER!

The brake is under spring tension. Parts could become loose and fly out suddenly if improper brake assembly resp. disassembly.
- Danger to life! -
The loading resp. unloading of the springs must not be realized by the brake housing screws, it has to be made with a suitable press and device.

Preferably the assembly/ disassembly should be done by Kessler & Co.

WARNING LABEL:

Assembly of the piston seals

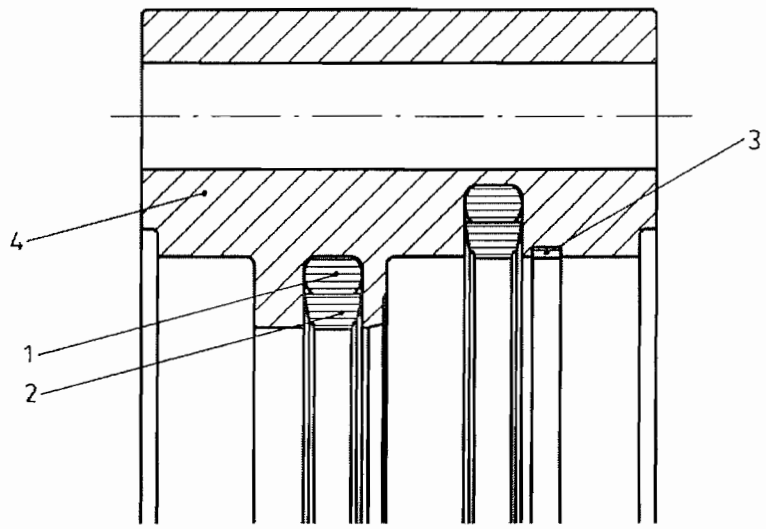

Install the o - rings (1) into the slots of the intermediate piece (4).

Install the profile seal rings (2) with stepped side to the piston showing into the slots of the intermediate piece (4).

Install the guide ring (3) into the slot of the intermediate piece.

Prepare the brake housing

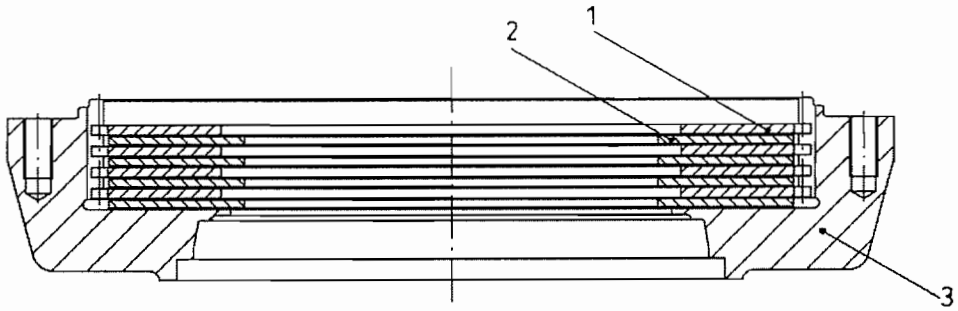

Lay the discs (1 + 2) alternately into the brake housing (3).

Hint: The upper disc always has to be an outer disc!

Assembly of intermediate piece, piston and springs

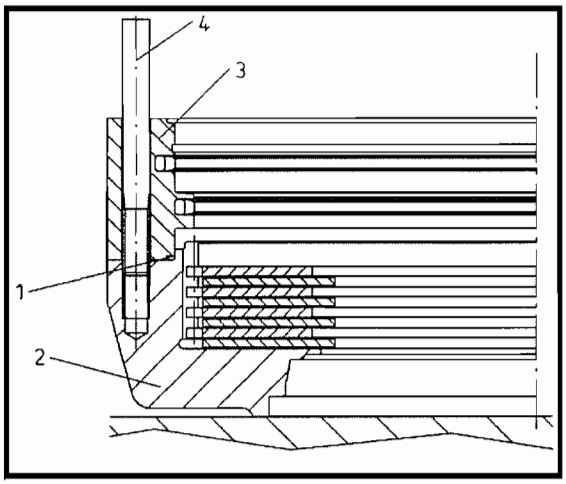

Assembly intermediate piece

Fit o - ring (1) onto the brake housing (2) and place on the intermediate piece (3), take the screw holes position into consideration.
It is recommendable to use 2 thread bolts (4) (longer screws without screw head) for fixation.

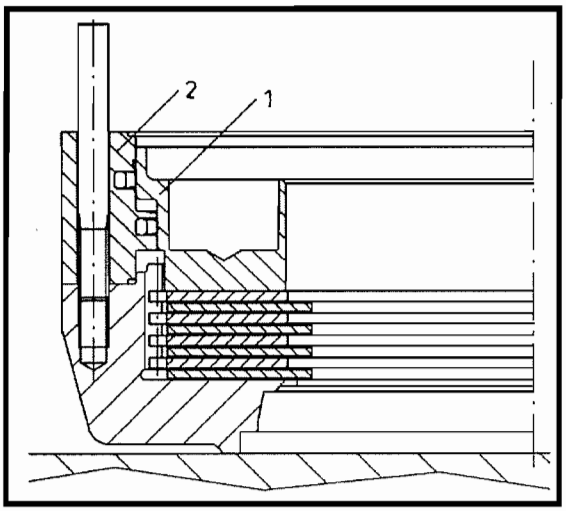

Assembly piston

Check the piston treads for intactness, wet the piston treads with oil. Install the piston (1) into the intermediate piece, take the position of the spring holes and screw holes into consideration.
Hint: The piston must not tilt (danger of seal tread damage!).

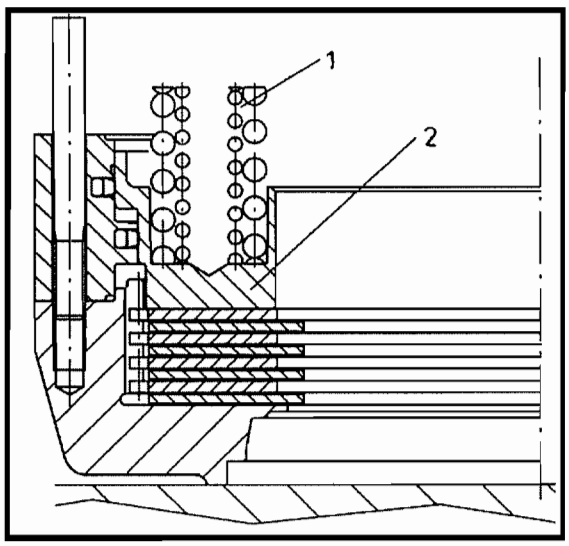

Assembly springs

Place the spring sets (1) in corresponding quantity and in corresponding arrangement into the piston (2).

Hint: If less spring sets than existing spring holes are assigned, pay attention to symmetrical spring distribution!

	spring arrangement				
	16 piec.	14 piec.	12 piec.	10 piec.	8 piec.
NLB x340		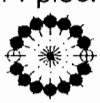	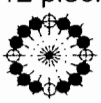	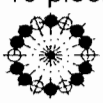	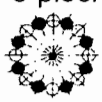

Assembly of brake carrier

- Fit the o - ring (1) onto the brake carrier (2).
- Place the brake carrier onto the springs (3), thereby note the position of the brake connections.
- Squeeze together the brake carrier and brake housing (5) by using a press and device, which is suitable for the brake beload.
- Detach the thread bolts and screw in and tighten the screws (6).
- Lift the press ram slowly.
- Install the warning label on the brake and stamp in the corresponding preload.

DANGER!

The brake is under spring tension. Parts could become loose and fly out suddenly if improper brake assembly resp. disassembly.

- Danger to life! -

The loading resp. unloading of the springs must not be realized by the brake housing screws, it has to be made with a suitable press and device.

Preferably the assembly/ disassembly should be done by Kessler & Co.

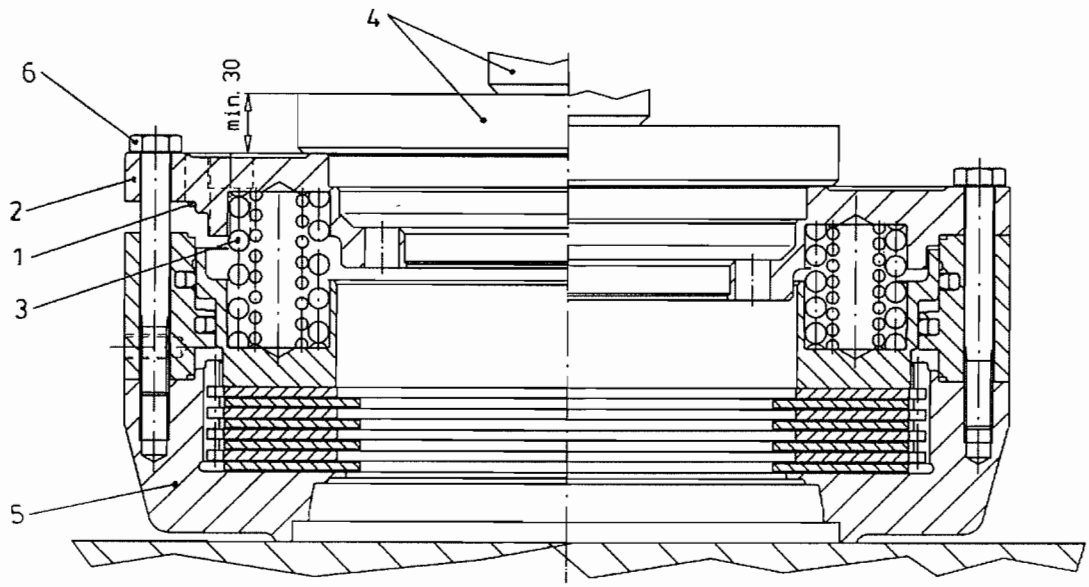

Final assembly

- Screw in the bleeder with connection piece and seal ring as well as the screw plugs with seal ring.
- Check brake hydraulic system for leaks (see sheet 7.11.7).
- **Check the air gap (pressurized):**
  Measure through the wear inspection hole the distance from the brake carrier to the piston end face, while non actuated brake (piston room pressurized), actuate the brake (piston room non pressurized) and repeat the measure operation - the difference of the measured distances gives the air gap sL (pressurized), rated size sL see table.
  Measure through the check hole the distance from brake carrier to the end face, while actuating the brake (piston room non pressurized) and stamp the now ascertained dimension into the brake carrier near by the wear inspection hole.

air gap and wear dimension		
brake type	air gap sL new (pressurized) [mm]	wear dimension [mm]
NLB 4340-FS	1,12 + 1,46	1,6
NLB 7340-FS	3,25 + 0,5/ - 0,5	2,8
NLB 3460-FS	3 + 0,5/ - 0,1	1,2
NLB 5460-FS	2,4 + 1,0/ - 0,7	2,0
NLB 7460-FS	3 + 0,5/ - 0,1	2,8
NLB 7460-1FS	3 + 0,5/ - 0,1	2,1
NLB 8460-FS	3,3 + 0,5/ - 0,1	3,2
NLB 8550-FS	3,5 + 0,5/ - 0,1	3,2

Hint: with increased disc wear and hence it resulting less spring tension the brake torque will be reduced.

- Install o - ring (brake carrier/ axle spindle resp. steering knuckle) free of torsion and loops (inapplicable at one-piece design brake carrier).
- Install the complete brake on the axle (coat the contact surface with Loctite 270) (inapplicable at one-piece design brake carrier).
- Mount face seal see chapter 5.8.
- **Centering of the discs:**
  The centering of the inner discs at wet disc brake dimension x340 has to be relized at wheel hub mounting by the wheel hub itself, to this the disc set has to be released by hydraulic pressure.
  The centering of the inner discs at wet disc brake dimension x460 and x550 has to be realized by using a center tool (see chapter 3.6), to this the disc set has to be released by hydraulic pressure. After centering clamp the disc set by releasing the hydraulic pressure (spring load effect).
  Hint: To save the centering of the disc set in case of disassembly the wheel hub, the hydraulic pressure should be released, so the disc set will be clamped (spring load effect).

Tightness checking instruction for brake hydraulic system and cooling oil room

Check brake hydraulic system for leaks

Before conducting the test, bleed the brake hydraulic system.

The pressure drop after applying pressure corresponding to the working pressure of the brake for a period of 15 minutes must not exceed 2%.

Test medium: Motor oil SAE 10 W corresponding to MIL - L 2104.

Check cooling oil room for leaks

Brake with external cooling:

After assembly of the wheel hub with the face seal and adjusting of the wheel bearings check the tightness of the cooling oil room.

Install an air pressure gauge with shutoff valve.

Beload the hub assembly with 1,5 bar pressure air.

Turn the hub assembly several times.

The pressure drop after a period of 10 minutes must not exceed 0,1 bar.

Brake without external cooling:

After assembly of the planetary gear drive check the tightness of the cooling oil room.

Install an air pressure gauge with shutoff valve.

Beload the hub assembly with 0,5 bar pressure air.

Turn the hub assembly several times.

The pressure drop after a period of 15 minutes must not exceed 0,1 bar.

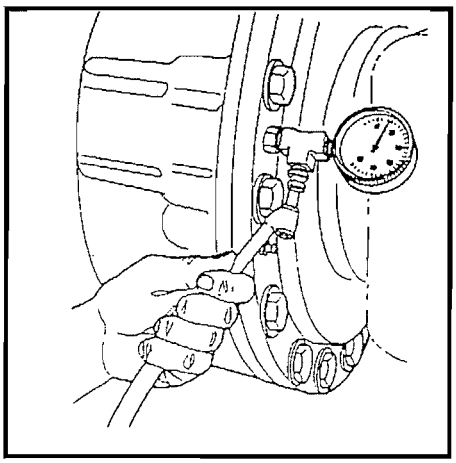

Disassembly of brake

WARNING!

Before commencing work on the brake, ensure that no unintended machine movement can happen when the braking effect is removed.
- Danger to life! -

- The complete brake can be removed from the axle spindle resp. steering knuckle after unscrewing of the screws (1) (inapplicable at one-piece design brake carrier).
  Hint: To safe the centering of the disc set in case of disassembly the wheel hub, the hydraulic pressure should be released, so the disc set will be clamped (spring load effect).
- The disassembly of the brake has to be realized in reverse sequence.

DANGER!

The brake is under spring tension. Parts could become loose and fly out suddenly if improper brake assembly resp. disassembly.
- Danger to life! -
The loading resp. unloading of the springs must not be realized by the brake housing screws, it has to be made with a suitable press and device.

Preferably the assembly/ disassembly should be done by Kessler & Co.

- Before unscrewing the screws (2) of the brake, the brake has to squeeze together by using a press and device (3), which are suitable for the brake preload (see warning label). After removing of all screws lift the press ram slowly till the springs are released.

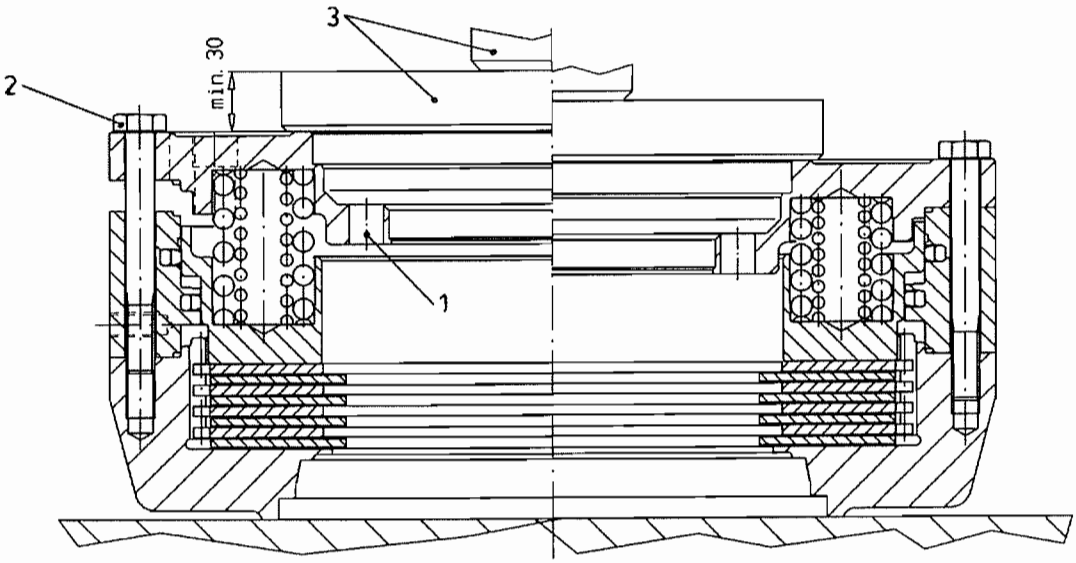

Remarks to the wet disc brake

Permissible oil for brake with external cooling

Actuation fluid:

Do not use brake fluid at any time!

Use a mineral oil base hydraulic oil type fluid only!

1) Motoroil API SE/ CD

MIL - L - 46152C/ MIL - L - 2104 C o. D

2) ATF C - 3 or Dexron ®

3) Hydraulicoil HLP DIN 51524 Teil 2

Viscosity:

For moderate climate	ISO VG 22 - 32
For extremely cold climate	ISO VG 15
For extremely warm climate	ISO VG 46

Cooling fluid: like actuation fluid.

Important: It is necessary to use oils with LS - additives (Limited Slip), according to the recommendation of the oil supplier.

For example: 3 - 6% Lubrizol LZ 6117/ LZ 9990 A or LZ 6279

Check measure:

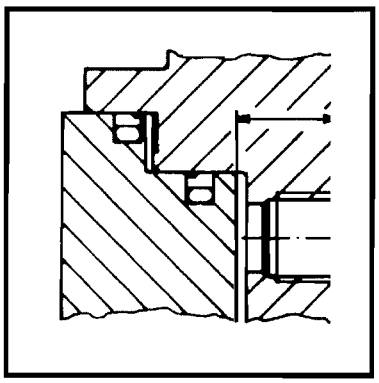

It is measured through the check hole, while actuating the brake.

The check measure, new, is marked in the housing below the hole.

Is the measured dimension bigger than the marked dimension and max. wear dimension, unconditional consult Kessler & Co.

After working at the brake, bleed the brake hydraulic system and check for tightness!

Brake design with lining wear indicator

Installation and basic setting of the lining wear indicator:

Assembly of the brake as described. Install the o-rings and the circlip onto the indicator pin. Push the indicator pin lightly greased into the thread bushing. Actuate the brake and screw in and adjust the thread bushing (Loctite 262 in thread) to a standout (x) of the indicator pin according to the respective wear dimension, nominal dimension see table on page 7.1.5 (NLB), 7.11.6 (NLB-FS) resp. 7.12.4 (NLB-FBR). Attach the seal ring, screw on and tighten the cap nut to a low torque.

Check lining wear:

Actuate the brake, detach the cap nut and push the indicator pin to the inside. The standout (x) of the indicator pin showes the maximum allowed residual lining wear. If the end face of the indicator pin is flush with the end face of the thread bushing, the maximum lining wear has been reached and a brake check is necessary, unconditional consult Kessler & Co.

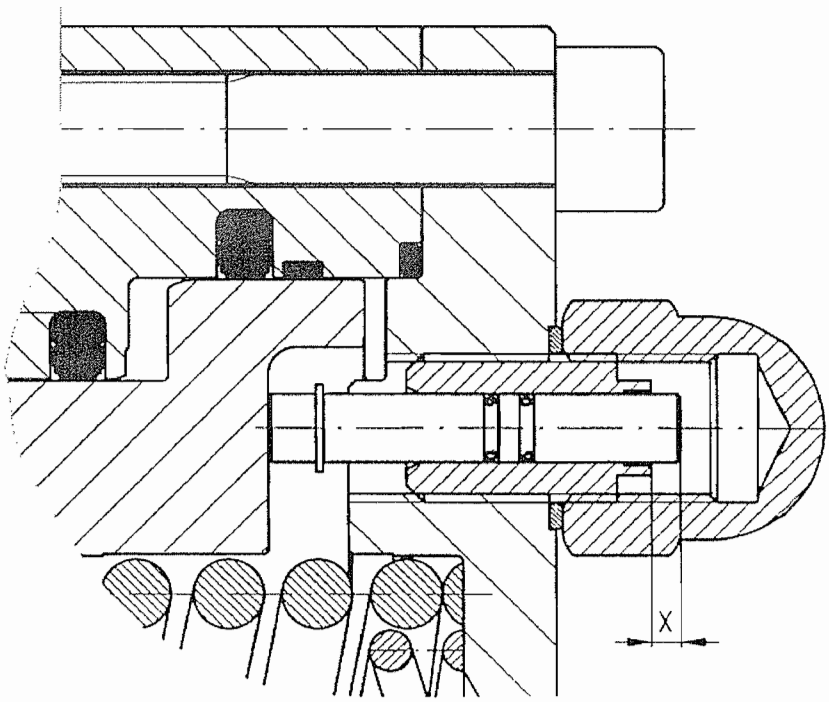

.

DST OUTBY 35S FILTER LIST

QUANTITY	PART NUMBER	DESCRIPTION
1	M503-573-01	ENGINE OIL FILTER
1	M505-578-01	FUEL FILTER
1	M503-576-01	FUEL / WATER SEPARATOR
1	M250-592-02	AIR FILTER – PRIMARY ELEMENT
1	M250-592-03	AIR FILTER – SAFETY ELEMENT
1	M30-411-01R	EXHAUST FILTER
1	M350-591-01	TRANSMISSION FILTER
1	M350-553-02	HYDRAULIC RETURN FILTER ELEMENT MAIN HYDRAULIC TANK
1	M350-570-02	HYDRAULIC RETURN FILTER ELEMENT BRAKE COOLANT TANK
1	M350-565-02	HYDRAULIC PRESSURE FILTER ELEMENT

.

35S LUBRICANTS CROSS REFERENCE LIST

CUMMINS ENGINE OIL……...SHELL ROTELLA
MOBIL DELVAC 1300

DANA POWERSHIFT TRANSMISSION…..SHELL DONAX TC 30
MOBIL POWER FLUID C-4
(CATERPILLAR TO-4
JOHN DEERE J20 C, D
ALLISON C-4
DEXTRON II)

KESSLER AXLE…….....SHELL SPIRAX HD
MOBIL LUBE HD PLUS
(HYPOID GEAR OIL SAE 90 PER MIL-L-2105 B)

KESSLER BRAKE COOLING OIL……SHELL DONAX TD
MOBIL 424

HYDRAULIC OIL……..SHELL TELLUS 68
MOBIL DTE 26

CHASSIS GREASE…….....SHELL SUPER DUTY GREASE 2
MOBIL DELVAC

1430 US HIGHWAY 45 N, VIENNA, ILLINOIS, 62995 PHONE 618-658-3000, FAX 618-658-3002
www.drysystemstech.com

CUMMINS

QSB 4.5 / 6.7

FAULT CODES

Appendix B. SAE Diagnostic Trouble Codes and Cummins Fault Codes

Fault Code	J1939 SPN	J1939 FMI	Lamp Color	J1939 SPN Description	Cummins Description
111	629	12	Red	Controller #1	Engine Control Module Critical internal failure - Bad intelligent Device or Component
115	612	2	Red	System Diagnostic Code # 2	Engine Speed/Position Sensor Circuit lost both of two signals from the magnetic pickup sensor - Data Erratic, Intermittent, or incorrect
122	102	3	Amber	Boost Pressure	Intake Manifold Pressure Sensor Circuit – Voltage Above Normal, or Shorted to High Source
123	102	4	Amber	Boost Pressure	Intake Manifold Pressure Sensor Circuit – Voltage Below Normal, or Shorted to Low Source
124	102	16	Amber	Boost Pressure	Intake Manifold 1 Pressure - Data Valid but Above Normal Operational Range - Moderately Severe Level
131	91	3	Red	Accelerator Pedal Position	Accelerator Pedal or Lever Position Sensor Circuit - Voltage Above Normal, or Shorted to High Source
132	91	4	Red	Accelerator Pedal Position	Accelerator Pedal or Lever Position Sensor Circuit - Voltage Below Normal, or Shorted to Low Source
133	974	3	Red	Remote Accelerator	Remote Accelerator Pedal or Lever Position Sensor Circuit – Voltage Above Normal, or Shorted to High Source
134	974	4	Red	Remote Accelerator	Remote Accelerator Pedal or Lever Position Sensor Circuit – Voltage Below Normal, or Shorted to Low Source
135	100	3	Amber	Engine Oil Pressure	Oil Pressure Sensor Circuit - Voltage Above Normal, or Shorted to High Source
141	100	4	Amber	Engine Oil Pressure	Oil Pressure Sensor Circuit - Voltage Below Normal, or Shorted to Low Source
143	100	18	Amber	Engine Oil Pressure	Oil Pressure Low – Data Valid but Below Normal Operational Range - Moderately Severe Level
144	110	3	Amber	Engine Coolant Temperature	Coolant Temperature Sensor Circuit – Voltage Above Normal, or Shorted to High Source
145	110	4	Amber	Engine Coolant Temperature	Coolant Temperature Sensor Circuit – Voltage Below Normal, or Shorted to Low Source
146	110	16	Amber	Engine Coolant Temperature	Coolant Temperature High - Data Valid but Above Normal Operational Range - Moderately Severe Level
147	91	1	Red	Accelerator Pedal Position	Accelerator Pedal or Lever Position Sensor Circuit – Abnormal Frequency, Pulse Width, or Period
148	91	0	Red	Accelerator Pedal Position	Accelerator Pedal or Lever Position Sensor Circuit – Abnormal Frequency, Pulse Width, or Period
151	110	0	Red	Engine Coolant Temperature	Coolant Temperature Low - Data Valid but Above Normal Operational Range - Most Severe Level
153	105	3	Amber	Intake Manifold #1 Temp	Intake Manifold Air Temperature Sensor Circuit - Voltage Above Normal, or Shorted to High Source
154	105	4	Amber	Intake Manifold #1 Temp	Intake Manifold Air Temperature Sensor Circuit - Voltage Below Normal, or Shorted to Low Source
155	105	0	Red	Intake Manifold #1 Temp	Intake Manifold Air Temperature High – Data Valid but Above Normal Operational Range - Most Severe Level
187	3510	4	Amber	5 Volts DC Supply	Sensor Supply Voltage #2 Circuit – Voltage Below Normal, or Shorted to Low Source

193	520199	3	Amber	Cruise Control	Cruise Control (Resistive) Signal Circuit - Voltage Above Normal, or Shorted to High Source
194	520199	4	Amber	Cruise Control	Cruise Control (Resistive) Signal Circuit - Voltage Below Normal, or Shorted to Low Source
195	111	3	Amber	Coolant Level	Coolant Level Sensor Circuit - Voltage Above Normal, or Shorted to High Source
196	111	4	Amber	Coolant Level	Coolant Level Sensor Circuit - Voltage Below Normal, or Shorted to Low Source
197	111	18	Amber	Coolant Level	Coolant Level - Data Valid but Below Normal Operational Range - Moderately Severe Level
199	1661	4	Amber	Engine Automatic Start Lamp	Engine Automatic Start Lamp Driver Circuit - Voltage Above Normal, or Shorted to High Source
211	1484	31	None	J1939 Error	Additional Auxiliary Diagnostic Codes logged - Condition Exists
212	175	3	Amber	Oil Temperature	Engine Oil Temperature Sensor 1 Circuit - Voltage Above Normal, or Shorted to High Source
213	175	4	Amber	Oil Temperature	Engine Oil Temperature Sensor 1 Circuit - Voltage Below Normal, or Shorted to Low Source
214	175	0	Red	Oil Temperature	Engine Oil Temperature - Data Valid but Above Normal Operational Range - Most Severe Level
221	108	3	Amber	Barometric Pressure	Barometric Pressure Sensor Circuit – Voltage Above Normal, or Shorted to High Source
222	108	4	Amber	Barometric Pressure	Barometric Pressure Sensor Circuit – Voltage Below Normal, or Shorted to Low Source
227	3510	3	Amber	5 Volts DC Supply	Sensor Supply Voltage #2 Circuit – Voltage Above Normal, or Shorted to High Source
231	109	3	Amber	Coolant Pressure	Coolant Pressure Sensor Circuit - Voltage Above Normal, or Shorted to High Source
232	109	4	Amber	Coolant Pressure	Coolant Pressure Sensor Circuit - Voltage Below Normal, or Shorted to Low Source
233	109	18	Amber	Coolant Pressure	Coolant Pressure - Data Valid but Below Normal Operational Range - Moderately Severe Level
234	190	0	Red	Engine Speed	Engine Speed High - Data Valid but Above Normal Operational Range - Most Severe Level
235	111	1	Red	Coolant Level	Coolant Level Low - Data Valid but Below Normal Operational Range - Most Severe Level
237	644	2	Amber	External Speed Input	External Speed Input (Multiple Unit Synchronization) - Data Erratic, Intermittent, or Incorrect
238	3511	4	Amber	System Diagnostic code # 1	Sensor Supply Voltage #3 Circuit – Voltage Below Normal, or Shorted to Low Source
239	3511	3	Amber	System Diagnostic code #2	Sensor Supply Voltage #3 Circuit - Voltage Above Normal, or Shorted to High Source
241	84	2	Amber	Wheel-based Vehicle Speed	Vehicle Speed Sensor Circuit - Data Erratic, Intermittent, or Incorrect
242	84	10	Amber	Wheel-based Vehicle Speed	Vehicle Speed Sensor Circuit tampering has been detected – Abnormal Rate of Change
244	623	4	Amber	Red Stop Lamp	Red Stop Lamp Driver Circuit - Voltage Below Normal, or Shorted to Low Source
245	647	4	Amber	Fan Clutch Output Device Driver	Fan Control Circuit - Voltage Below Normal, or Shorted to Low Source
249	171	3	Amber	Ambient Air Temperature	Ambient Air Temperature Sensor Circuit - Voltage Above Normal, or Shorted to High Source
256	171	4	Amber	Ambient Air Temperature	Ambient Air Temperature Sensor Circuit - Voltage Below Normal, or Shorted to Low Source
261	174	16	Amber	Fuel Temperature	Engine Fuel Temperature - Data Valid but Above Normal Operational Range - Moderately Severe Level

263	174	3	Amber	Fuel Temperature	Engine Fuel Temperature Sensor 1 Circuit - Voltage Above Normal, or Shorted to High Source
265	174	4	Amber	Fuel Temperature	Engine Fuel Temperature Sensor 1 Circuit - Voltage Below Normal, or Shorted to Low Source
268	94	2	Amber	Fuel Delivery Pressure	Fuel Pressure Sensor Circuit - Data Erratic, Intermittent, or Incorrect
271	1347	4	Amber	Fuel Pump Pressurizing Assembly #1	High Fuel Pressure Solenoid Valve Circuit – Voltage Below Normal, or Shorted to Low Source
272	1347	3	Amber	Fuel Pump Pressurizing Assembly #1	High Fuel Pressure Solenoid Valve Circuit – Voltage Above Normal, or Shorted to High Source
281	1347	7	Amber	Fuel Pump Pressurizing Assembly #1	High Fuel Pressure Solenoid Valve #1 – Mechanical System Not Responding Properly or Out of Adjustment
284	1043	4	Amber	Internal Sensor Voltage Supply	Engine Speed/Position Sensor (Crankshaft) Supply Voltage Circuit - Voltage Below Normal, or Shorted to Low Source
285	639	9	Amber	SAE J1939 Datalink	SAE J1939 Multiplexing PGN Timeout Error - Abnormal Update Rate
286	639	13	Amber	SAE J1939 Datalink	SAE J1939 Multiplexing Configuration Error – Out of Calibration
287	91	19	Red	Accelerator Pedal Position	SAE J1939 Multiplexing Accelerator Pedal or Lever Sensor System Error - Received Network Data In Error
288	974	19	Red	Remote Accelerator	SAE J1939 Multiplexing Remote Accelerator Pedal or Lever Data Error - Received Network Data In Error
292	441	14	Red	Auxiliary Temperature 1	Auxiliary Temperature Sensor Input 1 - Special Instructions
293	441	3	Amber	OEM Temperature	Auxiliary Temperature Sensor Input # 1 Circuit - Voltage Above Normal, or Shorted to High Source
294	441	4	Amber	OEM Temperature	Auxiliary Temperature Sensor Input # 1 Circuit - Voltage Below Normal, or Shorted to Low Source
295	108	2	Amber	Barometric Pressure	Barometric Pressure Sensor Circuit - Data Erratic, Intermittent, or Incorrect
296	1388	14	Red	Auxiliary Pressure	Auxiliary Pressure Sensor Input 1 - Special Instructions
297	1388	3	Amber	Auxiliary Pressure	Auxiliary Pressure Sensor Input # 2 Circuit - Voltage Above Normal, or Shorted to High Source
298	1388	4	Amber	Auxiliary Pressure	Auxiliary Pressure Sensor Input # 2 Circuit - Voltage Below Normal, or Shorted to Low Source
319	251	2	Maint	Real Time Clock Power	Real Time Clock Power Interrupt - Data Erratic, Intermittent, or Incorrect
322	651	5	Amber	Injector Cylinder #01	Injector Solenoid Cylinder #1 Circuit – Current Below Normal, or Open Circuit
323	655	5	Amber	Injector Cylinder #05	Injector Solenoid Cylinder #5 Circuit – Current Below Normal, or Open Circuit
324	653	5	Amber	Injector Cylinder #03	Injector Solenoid Cylinder #3 Circuit – Current Below Normal, or Open Circuit
325	656	5	Amber	Injector Cylinder #06	Injector Solenoid Cylinder #6 Circuit – Current Below Normal, or Open Circuit
331	652	5	Amber	Injector Cylinder #02	Injector Solenoid Cylinder #2 Circuit – Current Below Normal, or Open Circuit
332	654	5	Amber	Injector Cylinder #04	Injector Solenoid Cylinder #4 Circuit – Current Below Normal, or Open Circuit
334	110	2	Amber	Engine Coolant Temperature	Coolant Temperature Sensor Circuit – Data Erratic, Intermittent, or Incorrect

338	1267	3	Amber	Vehicle Accessories Relay Driver	Idle Shutdown Vehicle Accessories Relay Driver Circuit - Voltage Above Normal, or Shorted to High Source
339	1267	4	Amber	Vehicle Accessories Relay Driver	Idle Shutdown Vehicle Accessories Relay Driver Circuit - Voltage Below Normal, or Shorted to Low Source
341	630	2	Amber	Calibration Memory	Engine Control Module data lost - Data Erratic, Intermittent, or Incorrect
342	630	13	Red	Calibration Memory	Electronic Calibration Code Incompatibility - Out of Calibration
343	629	12	Amber	Controller #1	Engine Control Module Warning internal hardware failure - Bad Intelligent Device or Component
349	191	16	Amber	Transmission Output Shaft Speed	Transmission Output Shaft Speed - Data Valid but Above Normal Operational Range - Moderately Severe Level
351	627	12	Amber	Controller #1	Injector Power Supply - Bad Intelligent Device or Component
352	3509	4	Amber	5 Volts DC Supply	Sensor Supply Voltage #1 Circuit – Voltage Below Normal, or Shorted to Low Source
386	3509	3	Amber	5 Volts DC Supply	Sensor Supply Voltage #1 Circuit – Voltage Above Normal, or Shorted to High Source
415	100	1	Red	Engine Oil Pressure	Oil Pressure Low – Data Valid but Below Normal Operational Range - Most Severe Level
418	97	15	Maint.	Water in Fuel Indicator	Water in Fuel Indicator High - Data Valid but Above Normal Operational Range – Least Severe Level
422	111	2	Amber	Coolant Level	Coolant Level - Data Erratic, Intermittent, or Incorrect
425	175	2	Amber	Oil Temperature	Engine Oil Temperature - Data Erratic, Intermittent, or Incorrect
428	97	3	Amber	Water in Fuel Indicator	Water in Fuel Sensor Circuit - Voltage Above Normal, or Shorted to High Source
429	97	4	Amber	Water in Fuel Indicator	Water in Fuel Sensor Circuit - Voltage Below Normal, or Shorted to Low Source
431	558	2	Amber	Accelerator Pedal Low Idle Switch	Accelerator Pedal or Lever Idle Validation Circuit - Data Erratic, Intermittent, or Incorrect
432	558	13	Red	Accelerator Pedal Low Idle Switch	Accelerator Pedal or Lever Idle Validation Circuit - Out of Calibration
435	100	2	Amber	Engine Oil Pressure	Oil Pressure Sensor Circuit - Data Erratic, Intermittent, or Incorrect
441	168	18	Amber	Electrical Potential (Voltage)	Battery #1 Voltage Low - Data Valid but Below Normal Operational Range – Moderately Severe Level
442	168	16	Amber	Electrical Potential (Voltage)	Battery #1 Voltage High - Data Valid but Above Normal Operational Range – Moderately Severe Level
449	157	0	Red	Injector Metering Rail 1 Pressure	Fuel Pressure High - Data Valid but Above Normal Operational Range – Moderately Severe Level
451	157	3	Amber	Injector Metering Rail 1 Pressure	Injector Metering Rail #1 Pressure Sensor Circuit - Voltage Above Normal, or Shorted to High Source
452	157	4	Amber	Injector Metering Rail 1 Pressure	Injector Metering Rail #1 Pressure Sensor Circuit - Voltage Below Normal, or Shorted to Low Source
488	105	16	Amber	Intake Manifold	Intake Manifold 1 Temperature - Data Valid but Above Normal Operational Range - Moderately Severe Level
489	191	18	Amber	Transmission Output Shaft Speed	Transmission Output Shaft Speed - Data Valid but Below Normal Operational Range - Moderately Severe Level

497	1377	2	Amber	Switch Circuit	Multiple Unit Synchronization Switch Circuit - Data Erratic, Intermittent, or Incorrect
523	611	2	Amber	System Diagnostic code # 1	OEM Intermediate (PTO) Speed switch Validation - Data Erratic, Intermittent, or Incorrect
527	702	3	Amber	Circuit - Voltage	Auxiliary Input/Output 2 Circuit - Voltage Above Normal, or Shorted to High Source
528	93	2	Amber	Switch - Data	Auxiliary Alternate Torque Validation Switch - Data Erratic, Intermittent, or Incorrect
529	703	3	Amber	Circuit - Voltage	Auxiliary Input/Output 3 Circuit - Voltage Above Normal, or Shorted to High Source
546	94	3	Amber	Fuel Delivery Pressure	Fuel Delivery Pressure Sensor Circuit - Voltage Above Normal, or Shorted to High Source
547	94	4	Amber	Fuel Delivery Pressure	Fuel Delivery Pressure Sensor Circuit - Voltage Below Normal, or Shorted to Low Source
551	558	4	Amber	Accelerator Pedal Low Idle Switch	Accelerator Pedal or Lever Idle Validation Circuit - Voltage Below Normal, or Shorted to Low Source
553	157	16	Amber	Injector Metering Rail 1 Pressure	Injector Metering Rail #1 Pressure High – Data Valid but Above Normal Operational Range - Moderately Severe Level
554	157	2	Amber	Injector Metering Rail 1 Pressure	Fuel Pressure Sensor Error - Data Erratic, Intermittent, or Incorrect
559	157	18	Amber	Injector Metering Rail 1 Pressure	Injector Metering Rail #1 Pressure Low – Data Valid but Below Normal Operational Range - Moderately Severe Level
584	677	3	Amber	Starter Solenoid Lockout Relay Driver Circuit	Starter Relay Circuit - Voltage Above Normal, or Shorted to High Source
585	677	4	Amber	Starter Solenoid Lockout Relay Driver Circuit	Starter Relay Circuit - Voltage Below Normal, or Shorted to Low Source
595	103	16	Amber	Turbocharger 1 Speed	Turbocharger #1 Speed High - Data Valid but Above Normal Operational Range – Moderately Severe Level
596	167	16	Amber	Alternate Potential (voltage)	Electrical Charging System Voltage High – Data Valid but Above Normal Operational Range - Moderately Severe Level
597	167	18	Amber	Alternate Potential (voltage)	Electrical Charging System Voltage Low – Data Valid but Below Normal Operational Range - Moderately Severe Level
598	167	1	Red	Alternate Potential (voltage)	Electrical Charging System Voltage Low – Data Valid but Below Normal Operational Range - Most Severe Level
599	640	14	Red	Engine External Protection Input	Auxiliary Commanded Dual Output Shutdown - Special Instructions
649	1378	31	Maint	Engine Oil Change Interval	Change Lubricating Oil and Filter – Condition Exists
687	103	18	Amber	Turbocharger 1 Speed	Turbocharger #1 Speed Low - Data Valid but Below Normal Operational Range – Moderately Severe Level
689	190	2	Amber	Engine Speed	Primary Engine Speed Sensor Error – Data Erratic, Intermittent, or Incorrect
691	1172	3	Amber	Turbocharger #1Compressor Inlet Temperature	Turbocharger #1 Compressor Inlet Temperature Sensor Circuit – Voltage Above Normal, or Shorted to High Source
692	1172	4	Amber	Turbocharger #1Compressor Inlet Temperature	Turbocharger #1 Compressor Inlet Temperature Sensor Circuit – Voltage Below Normal, or Shorted to Low Source
697	1136	3	Amber	Sensor Circuit - Voltage	ECM Internal Temperature Sensor Circuit - Voltage Above Normal, or Shorted to High Source
698	1136	4	Amber	Sensor Circuit - Voltage	ECM Internal Temperature Sensor Circuit - Voltage Below Normal, or Shorted to Low Source

719	22	3	Amber	Crankcase Pressure	Extended Crankcase Blow-by Pressure Circuit - Voltage Above Normal, or Shorted to High Source
729	22	4	Amber	Crankcase Pressure	Extended Crankcase Blow-by Pressure Circuit - Voltage Below Normal, or Shorted to Low Source
731	723	7	Amber	Engine Speed Sensor #2	Engine Speed/Position #2 mechanical misalignment between camshaft and crankshaft sensors - Mechanical System Not Responding Properly or Out of Adjustment
757	2802	31	Amber	Electronic Control Module	Electronic Control Module data lost - Condition Exists
778	723	2	Amber	Engine Speed Sensor #2	Engine Speed Sensor (Camshaft) Error – Data Erratic, Intermittent, or Incorrect
779	703	11	Amber	Auxiliary Equipment Sensor Input	Warning Auxiliary Equipment Sensor Input # 3 (OEM Switch) - Root Cause Not Known
951	166	2	None	Cylinder Power	Cylinder Power Imbalance Between Cylinders - Data Erratic, Intermittent, or Incorrect
1117	627	2	None	Power Supply	Power Lost With Ignition On - Data Erratic, Intermittent, or Incorrect
1139	651	7	Amber	Injector Cylinder # 01	Injector Cylinder #1 - Mechanical System Not Responding Properly or Out of Adjustment
1141	652	7	Amber	Injector Cylinder # 02	Injector Cylinder #2 - Mechanical System Not Responding Properly or Out of Adjustment
1142	653	7	Amber	Injector Cylinder # 03	Injector Cylinder #3 - Mechanical System Not Responding Properly or Out of Adjustment
1143	654	7	Amber	Injector Cylinder # 04	Injector Cylinder #4 - Mechanical System Not Responding Properly or Out of Adjustment
1144	655	7	Amber	Injector Cylinder # 05	Injector Cylinder #5 - Mechanical System Not Responding Properly or Out of Adjustment
1145	656	7	Amber	Injector Cylinder # 06	Injector Cylinder #6 - Mechanical System Not Responding Properly or Out of Adjustment
1239	2623	3	Amber	Accelerator Pedal Position	Accelerator Pedal or Lever Position Sensor 2 Circuit - Voltage Above Normal, or Shorted to High Source
1241	2623	4	Amber	Accelerator Pedal Position	Accelerator Pedal or Lever Position Sensor 2 Circuit - Voltage Below Normal, or Shorted to Low Source
1242	91	2	Red	Accelerator Pedal Position	Accelerator Pedal or Lever Position Sensor 1 and 2 - Data Erratic, Intermittent, or Incorrect
1256	1563	2	Amber	Control Module Identification Input State	Control Module Identification Input State Error - Data Erratic, Intermittent, or Incorrect
1257	1563	2	Red	Control Module Identification Input State	Control Module Identification Input State Error - Data Erratic, Intermittent, or Incorrect
1852	97	16	Amber	Water in Fuel Indicator	Water in Fuel Indicator - Data Valid but Above Normal Operational Range - Moderately Severe Level
1911	157	0	Amber	Injector Metering Rail	Injector Metering Rail 1 Pressure - Data Valid but Above Normal Operational Range - Most Severe Level
2111	52	3	Amber	Coolant Temperature	Coolant Temperature 2 Sensor Circuit - Voltage Above Normal, or Shorted to High Source
2112	52	4	Amber	Coolant Temperature	Coolant Temperature 2 Sensor Circuit - Voltage Below Normal, or Shorted to Low Source
2113	52	16	Amber	Coolant Temperature	Coolant Temperature 2 - Data Valid but Above Normal Operational Range - Moderately Severe Level
2114	52	0	Red	Coolant Temperature	Coolant Temperature 2 - Data Valid but Above Normal Operational Range - Most Severe Level
2115	2981	3	Amber	Coolant Pressure	Coolant Pressure 2 Circuit - Voltage Above Normal, or Shorted to High Source

2116	2981	4	Amber	Coolant Pressure	Coolant Pressure 2 Circuit - Voltage Below Normal, or Shorted to Low Source
2117	2981	18	Amber	Coolant Pressure	Coolant Pressure 2 - Data Valid but Below Normal Operational Range - Moderately Severe Level
2182	1072	3	Amber	Engine Brake Output # 1	Engine Brake Actuator Driver 1 Circuit - Voltage Above Normal, or Shorted to High Source
2183	1072	4	Amber	Engine Brake Output # 1	Engine Brake Actuator Driver 1 Circuit - Voltage Below Normal, or Shorted to Low Source
2185	3512	3	Amber	System Diagnostic code # 1	Sensor Supply Voltage #4 Circuit – Voltage Above Normal, or Shorted to High Source
2186	3512	4	Amber	System Diagnostic code # 1	Sensor Supply Voltage #4 Circuit – Voltage Below Normal, or Shorted to Low Source
2195	703	14	Red	Auxiliary Equipment Sensor	Auxiliary Equipment Sensor Input 3 Engine Protection Critical - Special Instructions
2215	94	18	Amber	Fuel Delivery Pressure	Fuel Pump Delivery Pressure - Data Valid but Below Normal Operational Range - Moderately Severe Level
2216	94	1	Amber	Fuel Delivery Pressure	Fuel Pump Delivery Pressure - Data Valid but Above Normal Operational Range – Moderately Severe Level
2217	630	31	Amber	Calibration Memory	ECM Program Memory (RAM) Corruption - Condition Exists
2249	157	1	Amber	Injector Metering Rail 1 Pressure	Injector Metering Rail 1 Pressure - Data Valid but Below Normal Operational Range - Most Severe Level
2261	94	15	Maint	Fuel Delivery Pressure	Fuel Pump Delivery Pressure - Data Valid but Above Normal Operational Range - Least Severe Level
2262	94	17	Maint	Fuel Delivery Pressure	Fuel Pump Delivery Pressure - Data Valid but Below Normal Operational Range - Least Severe Level
2263	1800	16	Amber	Battery Temperature	Battery Temperature - Data Valid but Above Normal Operational Range - Moderately Severe Level
2264	1800	18	Amber	Battery Temperature	Battery Temperature - Data Valid but Below Normal Operational Range - Moderately Severe Level
2265	1075	3	Amber	Electric Lift Pump for Engine Fuel	Fuel Priming Pump Control Signal Circuit – Voltage Above Normal, or Shorted to High Source
2266	1075	4	Amber	Electric Lift Pump for Engine Fuel	Fuel Priming Pump Control Signal Circuit – Voltage Below Normal, or Shorted to Low Source
2292	611	16	Amber	Fuel Inlet Meter Device	Fuel Inlet Meter Device - Data Valid but Above Normal Operational Range - Moderately Severe Level
2293	611	18	Amber	Fuel Inlet Meter Device	Fuel Inlet Meter Device flow demand lower than expected - Data Valid but Below Normal Operational Range - Moderately Severe Level
2311	633	31	Amber	Fuel Control Valve #1	Fueling Actuator #1 Circuit Error – Condition Exists
2321	190	2	None	Engine Speed	Engine Speed / Position Sensor #1 - Data Erratic, Intermittent, or Incorrect
2322	723	2	None	Engine Speed Sensor #2	Engine Speed / Position Sensor #2 - Data Erratic, Intermittent, or Incorrect
2345	103	10	Amber	Turbocharger 1 Speed	Turbocharger speed invalid rate of change detected - Abnormal Rate of Change
2346	2789	15	None	System Diagnostic Code #1	Turbocharger Turbine Inlet Temperature (Calculated) - Data Valid but Above Normal Operational Range – Least Severe Level
2347	2790	15	None	System Diagnostic Code #1	Turbocharger Compressor Outlet Temperature (Calculated) - Data Valid but Above Normal Operational Range – Least Severe Level

2363	1073	4	Amber	Engine Compression Brake Output # 2	Engine Brake Actuator Circuit #2 – Voltage Below Normal, or Shorted to Low Source
2365	1112	4	Amber	Engine Brake Output # 3	Engine Brake Actuator Driver Output 3 Circuit - Voltage Below Normal, or Shorted to Low Source
2367	1073	3	Amber	Engine Compression Brake Output # 2	Engine Brake Actuator Circuit #2 – Voltage Above Normal, or Shorted to High Source
2368	1112	3	Amber	Engine Brake Output # 3	Engine Brake Actuator Driver 3 Circuit - Voltage Above Normal, or Shorted to High Source
2372	95	16	Amber	Engine Fuel Filter Differential Pressure	Fuel Filter Differential Pressure - Data Valid but Above Normal Operational Range - Moderately Severe Level
2373	1209	3	Amber	Exhaust Gas Pressure	Exhaust Gas Pressure Sensor Circuit - Voltage Above Normal, or Shorted to High Source
2374	1209	4	Amber	Exhaust Gas Pressure	Exhaust Gas Pressure Sensor Circuit - Voltage Below Normal, or Shorted to Low Source
2375	412	3	Amber	Exhaust Gas Recirculation Temperature	Exhaust Gas Recirculation Temperature Sensor Circuit - Voltage Above Normal, or Shorted to High Source
2376	412	4	Amber	Exhaust Gas Recirculation Temperature	Exhaust Gas Recirculation Temperature Sensor Circuit - Voltage Below Normal, or Shorted to Low Source
2377	647	3	Amber	Fan Clutch Output Device Driver	Fan Control Circuit - Voltage Above Normal, or Shorted to High Source
2425	730	4		Intake Air Heater # 2	Intake Air Heater 2 Circuit - Voltage Below Normal, or Shorted to Low Source
2426	730	3		Intake Air Heater # 2	Intake Air Heater 2 Circuit - Voltage Above Normal, or Shorted to High Source
2555	729	3	Amber	Inlet Air Heater Driver #1	Intake Air Heater #1 Circuit - Voltage Above Normal, or Shorted to High Source
2556	729	4	Amber	Inlet Air Heater Driver #1	Intake Air Heater #1 Circuit - Voltage Below Normal, or Shorted to Low Source
2557	697	3	Amber	Auxiliary PWM Driver #1	Auxiliary PWM Driver #1 - Voltage Above Normal, or Shorted to High Source
2558	697	4	Amber	Auxiliary PWM Driver #1	Auxiliary PWM Driver #1 - Voltage Below Normal, or Shorted to Low Source
2963	110	15	None	Engine Coolant Temperature	Engine Coolant Temperature High - Data Valid but Above Normal Operational Range - Least Severe Level
2973	102	2	Amber	Boost Pressure	Intake Manifold Pressure Sensor Circuit - Data Erratic, Intermittent, or Incorrect