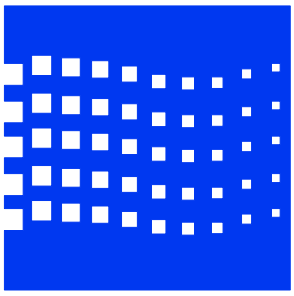

Dry Systems® Technologies
Technology for a cleaner environment
10420 Rising Court Woodridge, IL 60517

Customized Parts Catalog for Engine Model

6CTAA 8.3 185 HP

M500-240-11

Table of Contents

	Page No.
Accessory Drive Pulley	54
Air Compressor	19
Air Compressor Inlet Plumbing	18
Air Fuel Control Plumbing	25
Air Intake Manifold	43
Belt Tensioner	76
Cabin Heater Plumbing	42
Camshaft	58
Compressor Coolant Plumbing	14
Coolant Heater Starting Aid	17
Corrosion Resistor	72
CPR Air Discharge Plumbing	16
Crankcase Breather	12
Crankshaft Assembly	9
Cylinder Block	5
Cylinder Block LBC Plumbing	3
Cylinder Head	59
Cylinder Head Plumbing	61
Cylinder Liner	7
Drive Fan	24
Engine Coolant Vent	66
Engine Oil Cooler	45
Exhaust Manifold	68
Exhaust Manifold Mounting	68
Flywheel	38
Flywheel Housing	28
Flywheel Mounting	39
Front Drive Adapter	2
Front Engine Support	23
Front Gear Cover	41
Front Gear Housing	11
Fuel Filter Location	26
Fuel Filter Plumbing	27
Fuel Inlet Fitting	30
Fuel Plumbing	36
Fuel Pump Lbc Plumbing	32
Fuel Pump Lube Plumbing	31
Fuel Pump Mounting	33
Fuel Shutoff Valve	37
Fuel Transfer Pump	35
Full Flow Oil Filter	47
Gear Cover Mounting	40
Injector	58
Injector Plumbing	63
Lifting Arrangement	44
Lube Oil Pump	50
Oil Filler Arrangement	51
Oil Level Gauge	49
Oil Pan	52
Performance Parts	55
Piston Cooling Nozzle	8
Plumbing, Cylinder Block Coolant	4
Plumbing, Turbocharger	70
Rocker Lever	64
Service Repair Kit, Lower Engine Gaskets	79
Service Repair Kit, Bearings & Pistons	80
Service Repair Kit, Upper Engine Gaskets	81
Tachometer Drive	67
Thermostat	22
Torque Convertor Oil Cooler	69
Turbocharger	62
Valve Cover	71
Valve Tappet	10
Vibration Damper	21
Water Inlet Connection	74
Water Outlet Connection	75
Water Pump	77
Water Pump Drive Belt	78
Part Number Index	A-1

NOTE: Part numbers appearing in ( ) are for identification purposes only and should not be used when ordering service replacement parts.

Dry Systems® Technologies

FRONT DRIVE ADAPTER

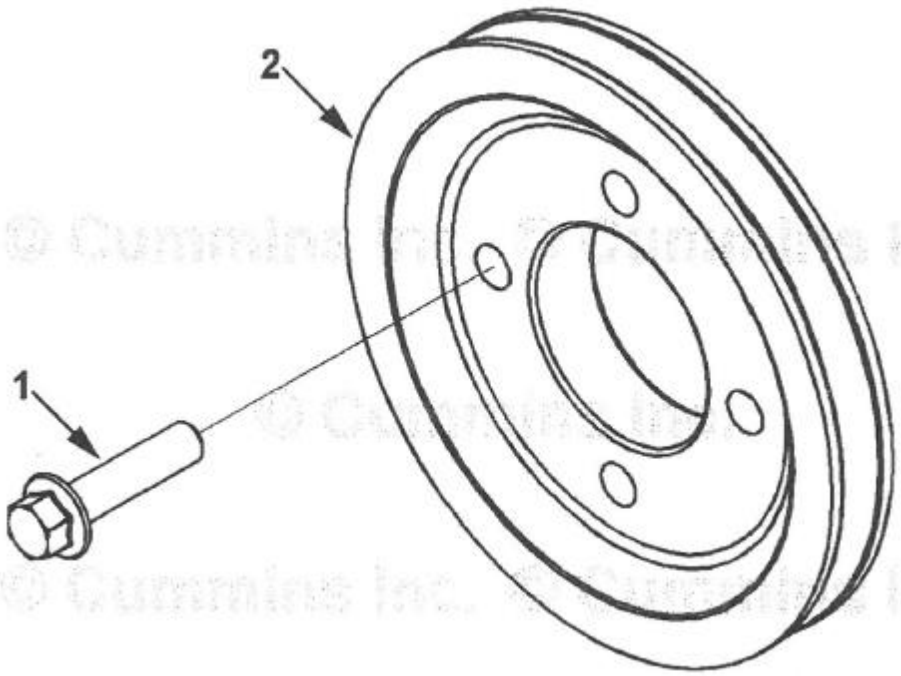

Item	Qty	Part Number	Description
1	4	M321-501-01	Screw, Hex Flange Head Cap
2	1	M321-501-02	Pully, Crankshaft

Dry Systems® Technologies

CYLINDER BLOCK LBC PLUMBING

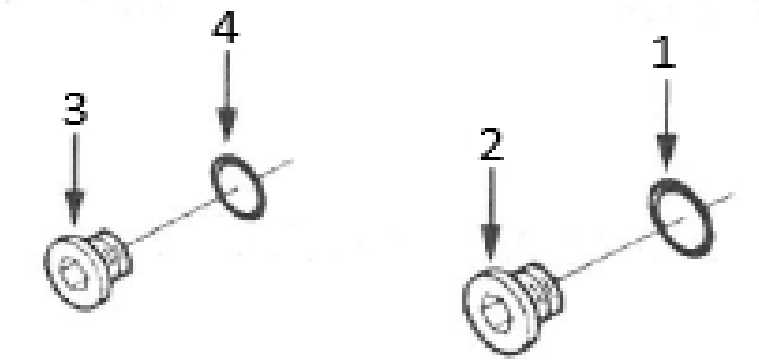

Item	Qty	Part Number	Description	
	1	M321-501-03	Plug, Threaded	M14
1	1	M321-501-04	Seal, O-Ring	M14
2	1	(M321-501-05)	Plug, Threaded	M14
	5	M321-501-06	Plug, Threaded	M10
3	1	(M321-501-07)	Plug, Threaded	M10
4	1	M321-501-08	Seal, O-Ring	M10

Dry Systems® Technologies

PLUMBING, CYL BLOCK COOLANT

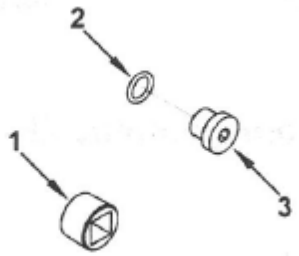

Item	Qty	Part Number	Description	
1	2	M321-501-09	Plug, Pipe	3/4 NPT
	1	M321-501-03	Plug, Threaded	M14
2	1	M321-501-04	Seal, O-Ring	M14
3	1	(M321-501-05)	Plug, Threaded	M14

Dry Systems® Technologies

CYLINDER BLOCK

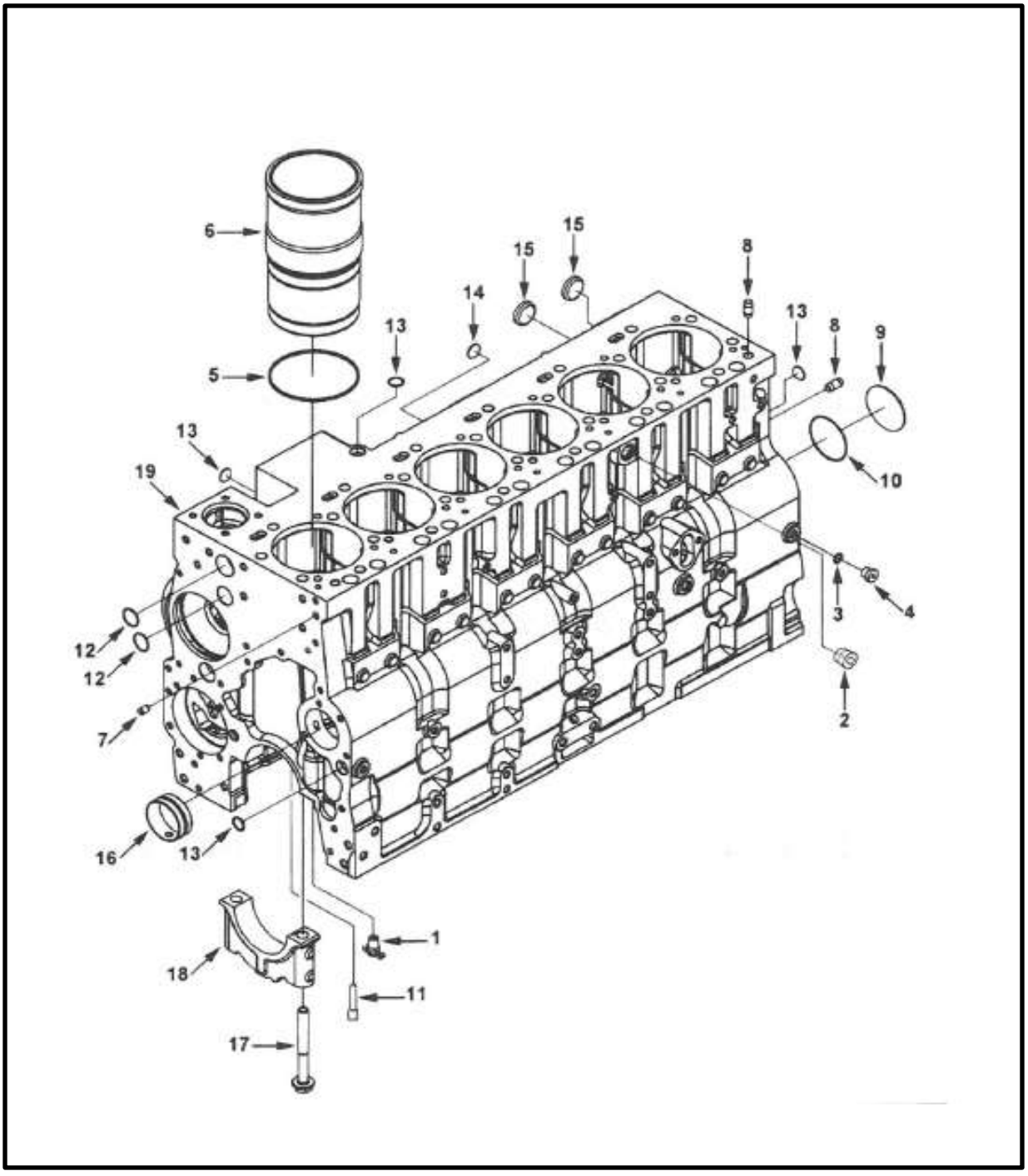

Dry Systems® Technologies

CYLINDER BLOCK

Item	Qty	Part Number	Description
1	1	M321-501-10	Draincock
2	1	M321-501-227	Plug, Pipe 1/2 NPT
	1	M321-501-03	Plug, Threaded M14
3	1	M321-501-04	Seal, O-Ring M14
4	1	(M321-501-05)	Plug, Threaded M14
	6	M321-501-11	Kit, Cylinder Liner
5	1	M321-501-12	Seal, Rectangular Ring
6	1	(M321-501-13)	Liner, Cylinder (Sold in higher level assy / kits)
7	2	M321-501-14	Pin, Dowel
8	2	M321-501-15	Pin, Dowel
9	1	M321-501-16	Plug, Expansion
10	1	M321-501-17	Seal, O-Ring
11	12	M321-501-18	Nozzle, Piston Cooling
	1	M321-501-19	Block, Cylinder
12	3	M321-501-20	Plug, Expansion
13	4	M321-501-21	Plug, Expansion
14	3	M321-501-22	Plug, Expansion
15	4	M321-501-23	Plug, Expansion
16	7	M321-501-24	Bushing
17	14	M321-501-25	Screw, Hex Head Flange Head Cap
18	7	M321-501-26	Cap, Main Bearing
19	1	(M321-501-27)	Block, Cylinder
			Counterbore Service Shims
	A/R	M321-501-28	Shim 0.25mm Oversize (0.010 in)
	A/R	M321-501-29	Shim 0.38mm Oversize (0.015 in)
	A/R	M321-501-30	Shim 0.51mm Oversize (0.020 in)
	A/R	M321-501-31	Shim 0.75mm Oversize (0.030 in)
	A/R	M321-501-32	Shim 1.00mm Oversize (0.040 in)

Dry Systems® Technologies

CYLINDER LINER

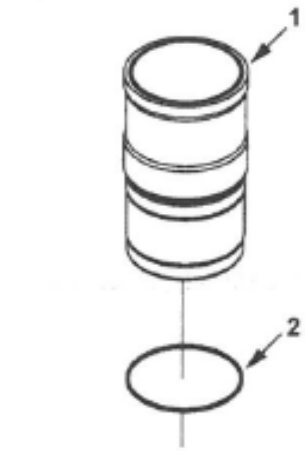

Item	Qty	Part Number	Description
	6	M321-501-11	Kit, Cylinder Liner
1	1	(M321-501-13)	Liner, Cylinder (Sold in higher level assy / kit)
2	1	M321-501-12	Seal, Rectangualr Ring
			Counterbore Service Shims
	A/R	M321-501-28	Shim 0.25mm Oversize (0.010 in)
	A/R	M321-501-29	Shim 0.38mm Oversize (0.015 in)
	A/R	M321-501-30	Shim 0.51mm Oversize (0.020 in)
	A/R	M321-501-31	Shim 0.75mm Oversize (0.030 in)
	A/R	M321-501-32	Shim 1.00mm Oversize (0.040 in)

Dry Systems® Technologies

PISTON COOLING NOZZLE

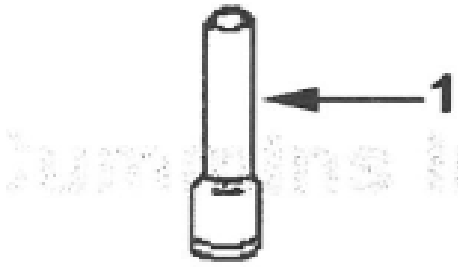

Item	Qty	Part Number	Description
1	12	M321-501-18	Nozzle, Piston Cooling

Dry Systems® Technologies

CRANKSHAFT ASSEMBLY

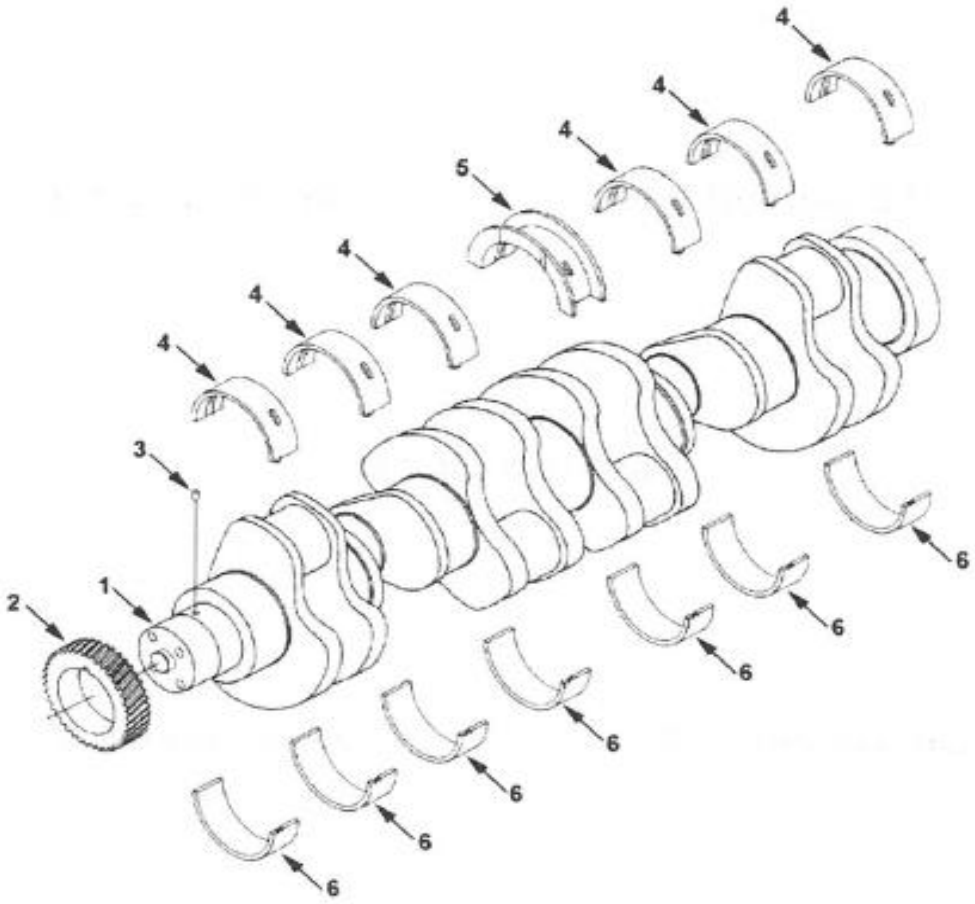

Item	Qty	Part Number	Description
	1	M321-501-33	Assembly TLA, Crankshaft
1	1	(M321-501-34)	Crankshaft, Engine
2	1	M321-501-35	Gear, Crankshaft
3	1	M321-501-36	Pin, Dowel
	1	M321-501-17	Seal, O-Ring
			Main Bearing Sets
	1	M321-501-37	Kit, PDC Standard
4	6	(M321-501-38)	Bearing, Main (Sold in higher level assy / kit
5	1	M321-501-39	Bearing, Crakshaft Thrust Standard
6	7	(M321-501-40)	Bearing, Main (Sold in higher level assy / kit)

Dry Systems® Technologies

VALVE TAPPET

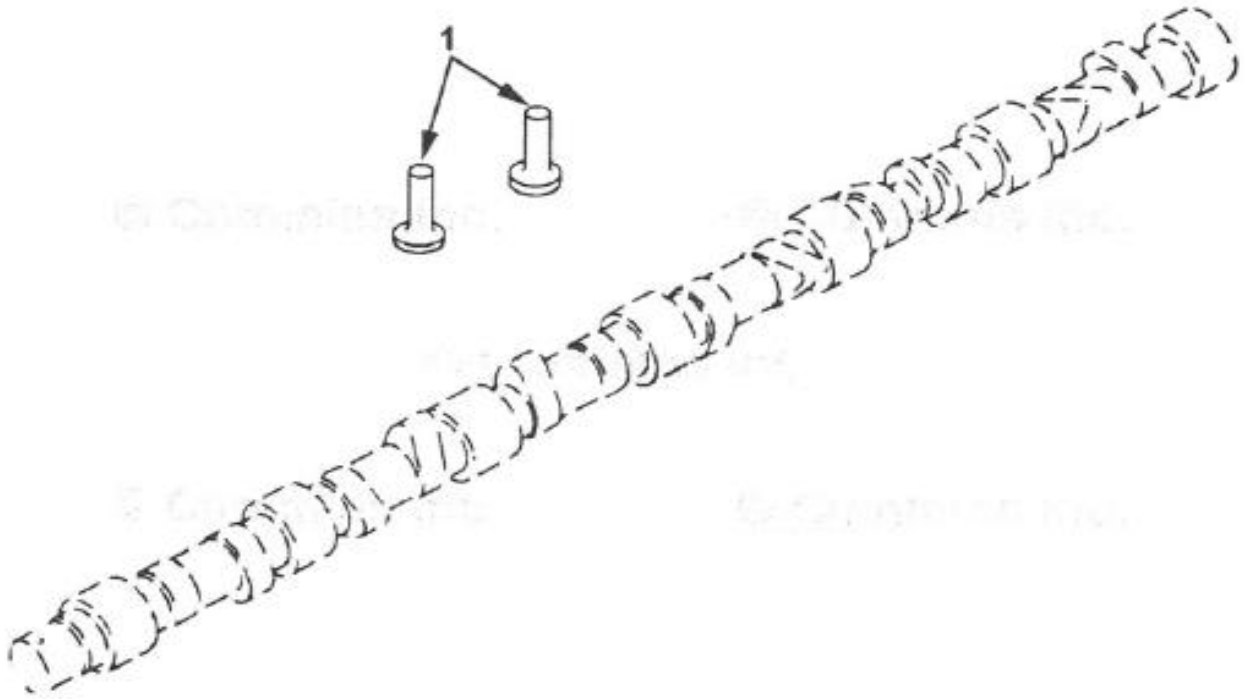

Item	Qty	Part Number	Description
1	12	M321-501-41	Tappet, Valve

Dry Systems® Technologies

FRONT GEAR HOUSING

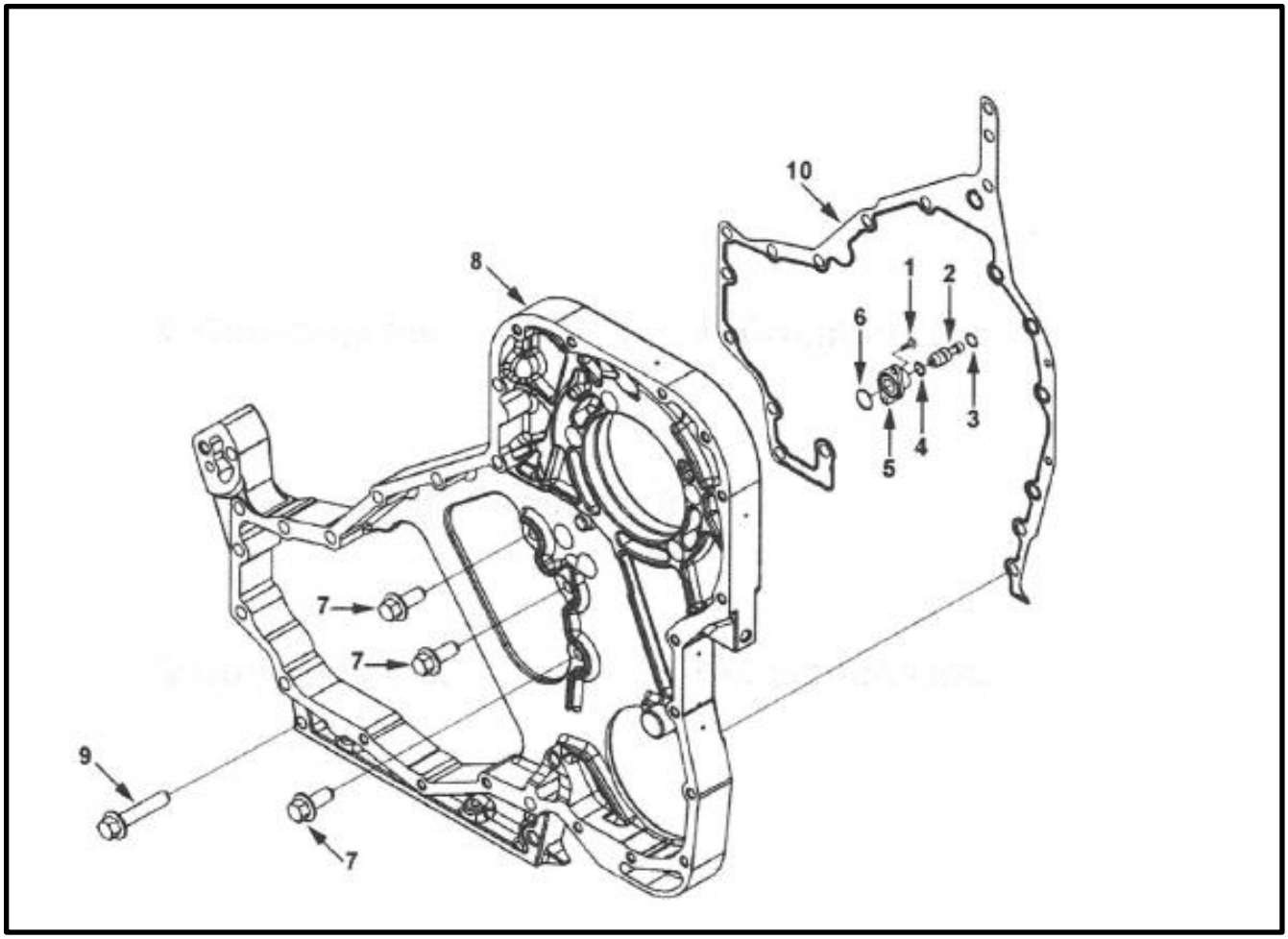

Item	Qty	Part Number	Description
1	2	M321-501-42	Screw, Round Head Cap
	1	M321-501-43	Housing, Timing Pin
2	1	M250-614-01	Pin, Timing
3	1	M321-501-44	Ring, Retaining
4	1	M250-615-01	Seal, O-Ring
5	1	M250-616-01	Housing, Timing Pin
6	1	M250-617-01	Seal, Rectangular Ring
7	3	M321-501-45	Screw, Hex Flange Head Cap
8	1	M321-501-46	Housing, Gear
9	3	M321-501-47	Screw, Hex Flange Head Cap
10	1	M321-501-48	Gasket, Gear Housing

Dry Systems® Technologies

CRANKCASE BREATHER

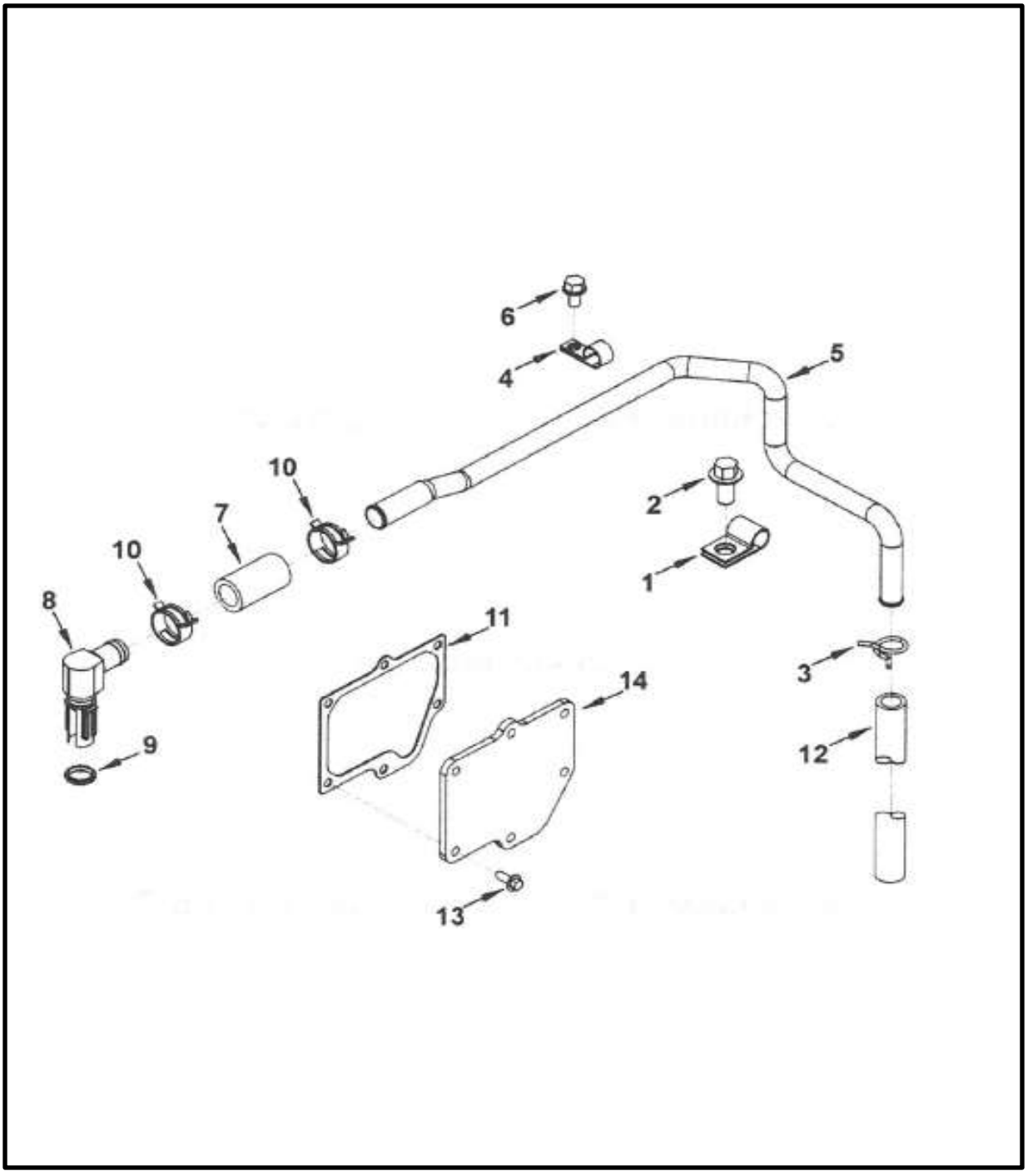

Dry Systems® Technologies

CRANKCASE BREATHER

Item	Qty	Part Number	Description
1	1	M321-501-49	Clip
2	1	M321-501-50	Screw, Hex Flange Head Cap
3	1	M321-501-51	Clamp, Spring Hose
4	1	M321-501-52	Clip
5	1	M321-501-53	Tube, Breather
6	1	M321-501-54	Screw, Self Tapping Metal
7	1	M321-501-55	Hose, Plain
8	1	M321-501-56	Connection, Vent
9	1	M321-501-57	Seal, Rectangular Ring
10	2	M321-501-58	Clamp, Hose
11	1	M321-501-59	Gasket, Breather
12	1	M321-501-60	Hose, PLain
13	6	M321-501-61	Screw, Hex Flange Head Cap
14	1	M321-501-62	Plate, Cover

Dry Systems® Technologies

COMPRESSOR COOLANT PLUMBING

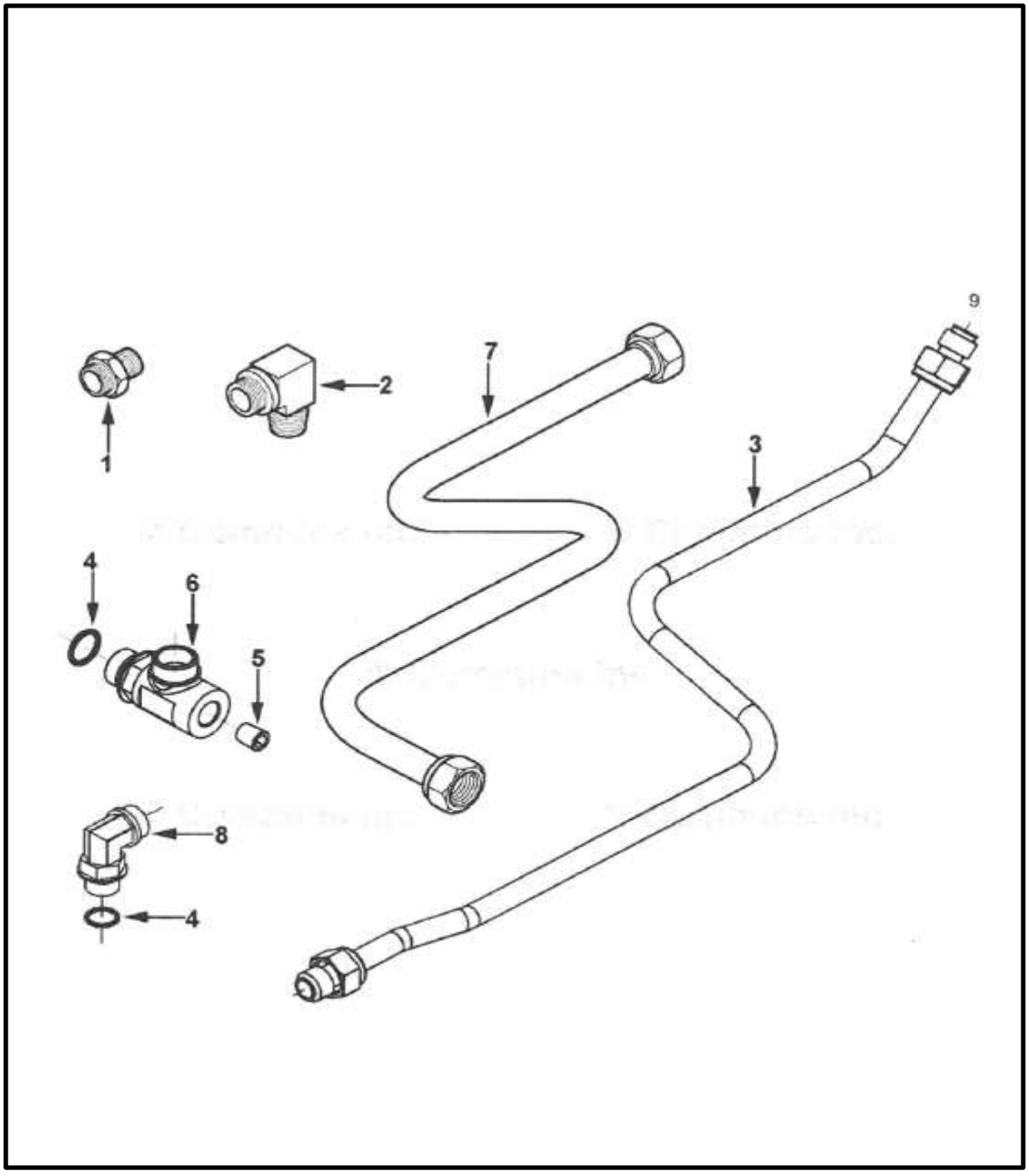

Dry Systems® Technologies

COMPRESSOR COOLANT PLUMBING

Item	Qty	Part Number	Description
1	1	M321-501-63	Connector, Male
2	1	M321-501-64	Elbow, Male Adapter
3	1	M321-501-65	Tube, Cpr Water Inlet
	1	M321-501-66	Tee, Plain Adapter
4	2	M321-501-67	Seal, O-Ring
5	1	M321-501-68	Plug, Pipe
6	1	(M321-501-69)	Tee, Plain Adapter
7	1	M321-501-70	Tube, Cpr Water Outlet
	1	M321-501-71	Elbow, Male adapter
8	1	(M321-501-72)	Elbow, Male adapter
9	1	M508-558-01	Seal

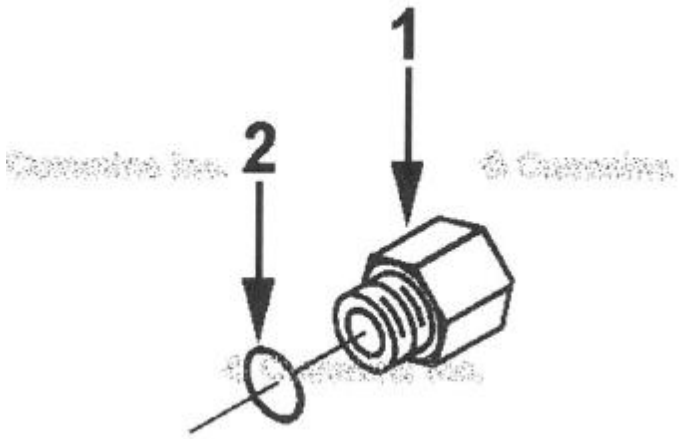

Item	Qty	Part Number	Description
	1	M321-501-73	Union, Female Adapter
1	1	(M321-501-74)	Union, Female Adapter
2	1	M321-501-75	Seal, O-Ring

Dry Systems® Technologies

COOLANT HEATER STARTING AID

Item	Qty	Part Number	Description
1	1	M321-509-09	Plug, Pipe

Dry Systems® Technologies

AIR COMPRESSOR INLET PLUMBING

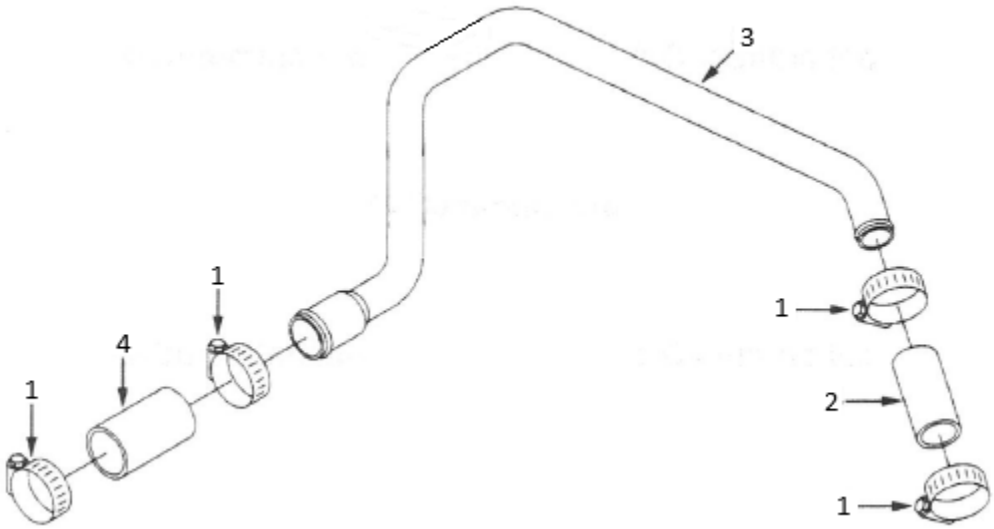

Item	Qty	Part Number	Description
1	4	M600-730-01	Clamp, Hose
2	1	M250-622-01	Hose, Plain, Upper
3	1	M250-206-02	Tube, Compressor Air Inlet
4	1	M250-622-02	Hose, Plain, Lower

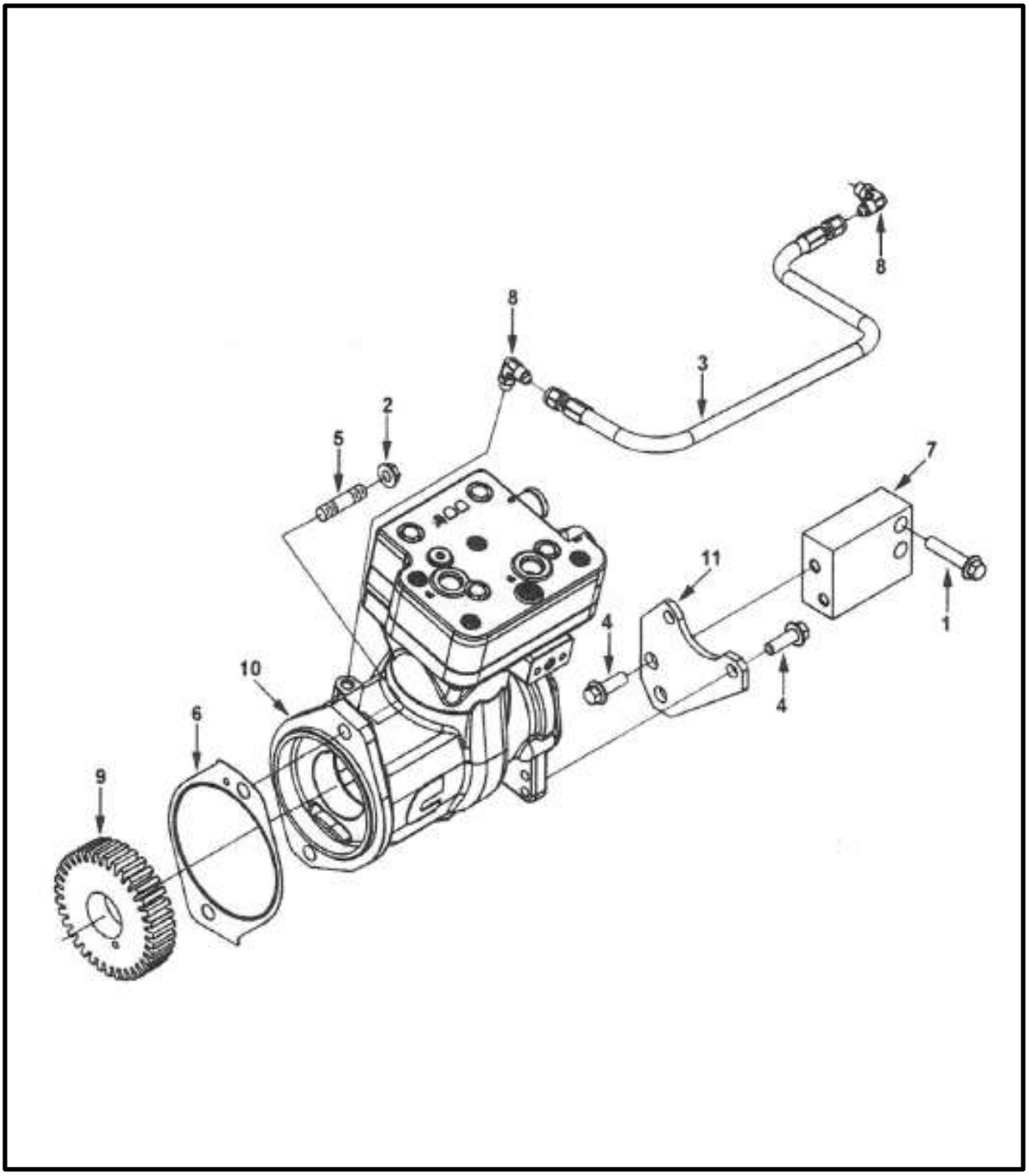
8
8
3
2
5
7
11
1
4
4
10
6
9

Dry Systems® Technologies

AIR COMPRESSOR

Item	Qty	Part Number	Description	
1	2	M250-623-01	Screw, Hex Flange Head Cap	
2	2	M509-531-01	Nut, Hexagon Flange	
3	1	M321-501-76	Hose, Flexible	
4	4	M321-501-77	Screw, Hex Flange Head Cap	
5	2	M321-501-78	Stud	
6	1	M506-570-01	Gasket, Hydraulic Pump	
7	1	M321-501-79	Spacer, Mounting	
8	1	M321-501-80	Elbow, Plain Union	
	1	M250-591-02	Compressor, Air	(includes # 9)
9	1	M250-591-03	Gear, Accessory Drive	
10	1	M250-591-01	Compressor, Air	
11	1	M321-501-81	Brace, Air Compressor	
			COMPRESSOR SERVICE KITS	
	1	M250-591-04	Kit, Air Compressor Repair	
	1	M250-591-05	Kit, Rear Seal & Adapter	
	1	M250-591-06	Kit, Gasket	
	1	M250-591-07	Adapter, Spline	

Dry Systems® Technologies

VIBRATION DAMPER

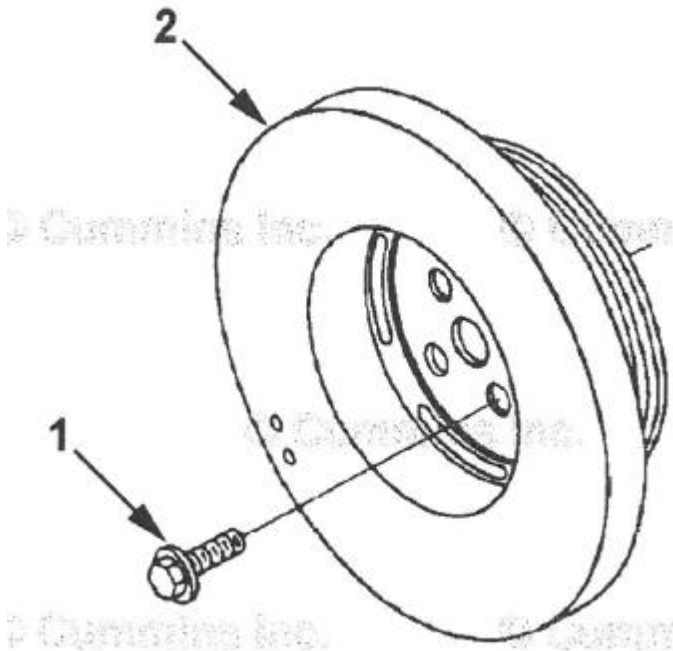

Item	Qty	Part Number	Description
1	4	M321-501-82	Screw, Hex Flange Head Cap
2	1	M321-501-83	Damper, Vibration

Dry Systems® Technologies

THERMOSTAT

Item	Qty	Part Number	Description	
1	1	M504-517-01	Thermostat	(160 F Thermostat)

Dry Systems® Technologies

FRONT ENGINE SUPPORT

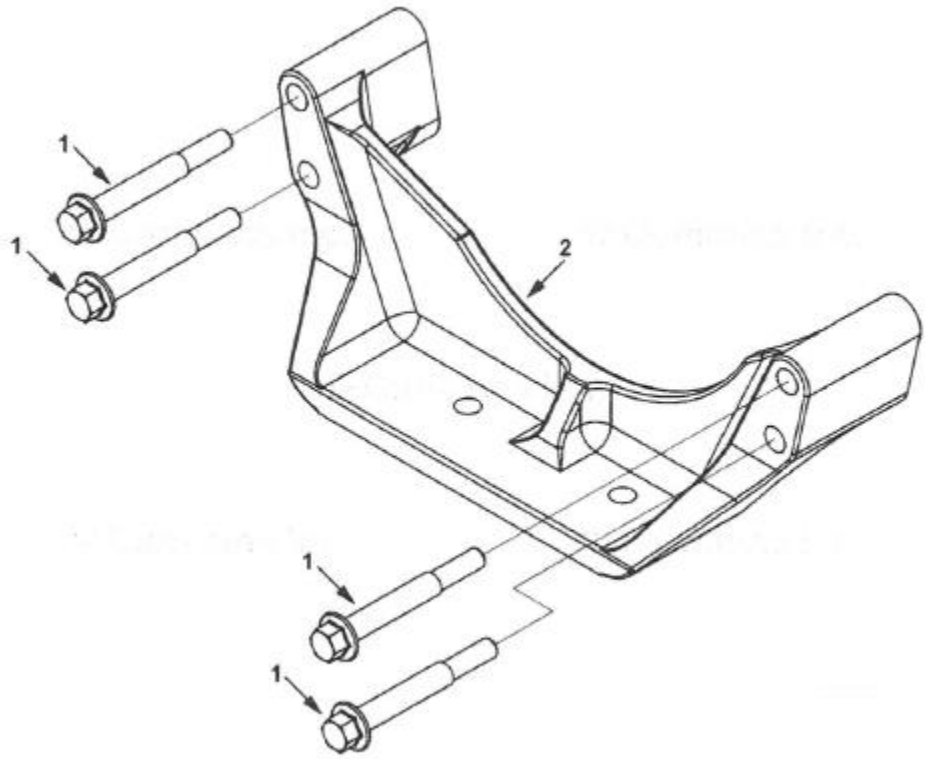

Item	Qty	Part Number	Description
1	4	M321-501-84	Screw, Hex Flange Head Cap
2	1	M321-501-85	Support, Front Engine

Dry Systems® Technologies

DRIVE FAN

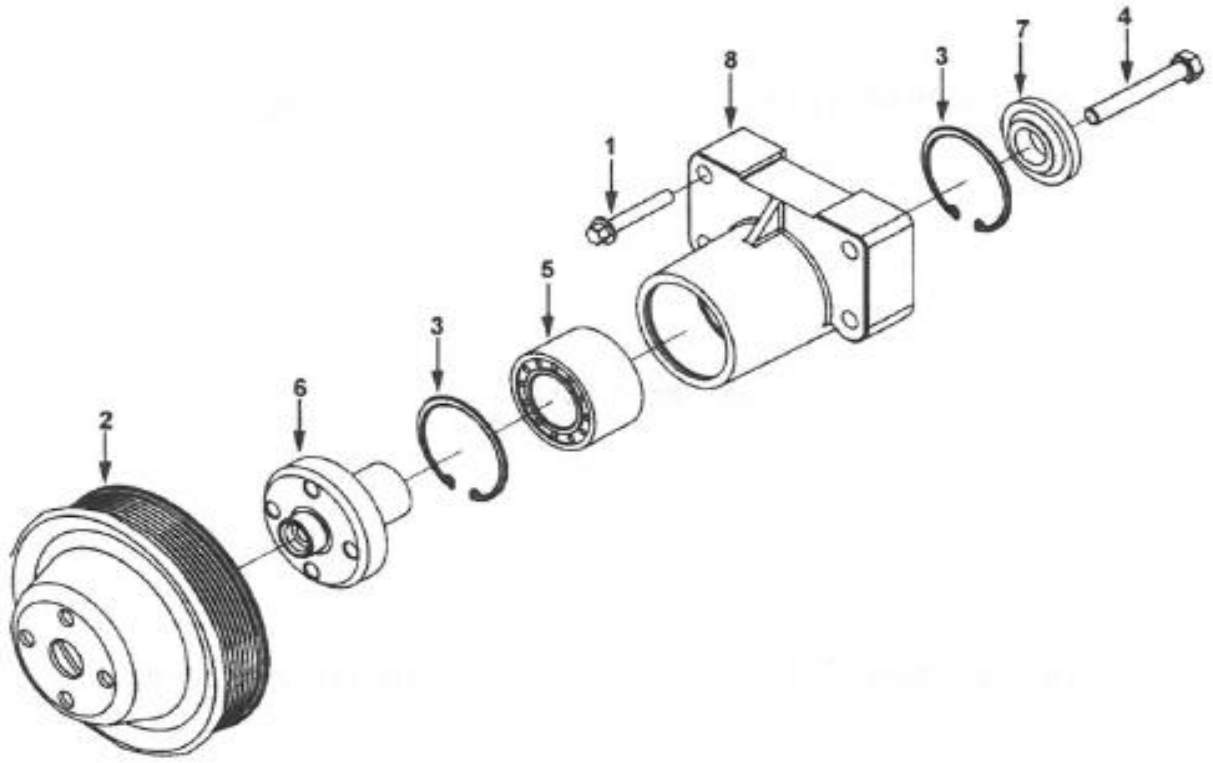

NOT USED WITH M250-549-01 FAN CLUTCH ASSEMBLY

Item	Qty	Part Number	Description
1	4	M250-623-01	Screw, Hex Flange Head Cap
2	1	M503-528-01	Pulley, Fan
	1	M502-575-01	Support, Fan
3	2	M510-576-01	Ring, Retaining
4	1	M510-577-01	Screw, Hexagon Head Cap
5	1	M509-583-01	Bearing, Ball
6	1	M321-501-86	Hub, Fan
7	1	M510-578-01	Retainer, Fan Hub
8	1	(M321-501-87)	Support, Fan

Dry Systems® Technologies

AIR FUEL CONTROL PLUMBING

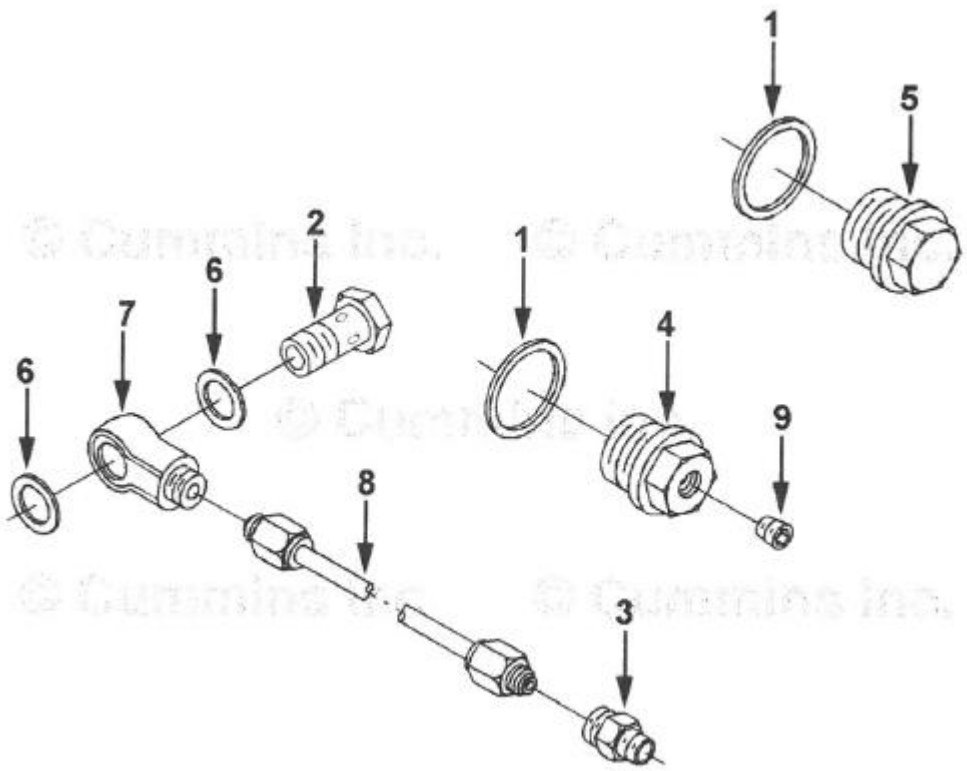

Item	Qty	Part Number	Description
1	2	M321-501-88	Washer, Sealing
2	1	M506-533-01	Screw, Banjo Connector
3	1	M506-534-01	Connector, Male
4	1	M321-501-89	Plug, Threaded
5	1	M321-501-90	Plug, Threaded
6	2	M506-535-01	Washer, sealing
7	1	M506-536-01	Connector, Banjo
8	1	M506-537-01	Tube, Air Fuel Control
9	1	M321-501-91	Plug, Pipe

Dry Systems® Technologies

FUEL FILTER LOCATION

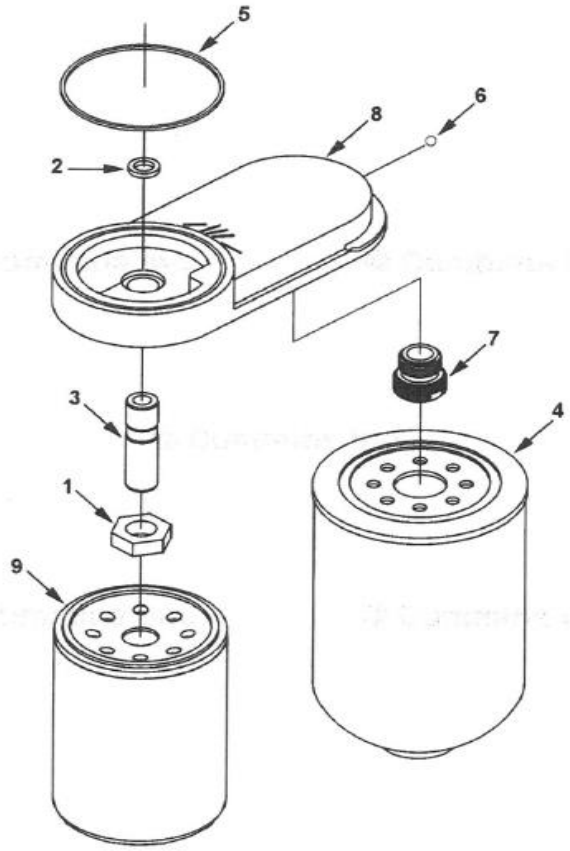

Item	Qty	Part Number	Description
1	1	M321-501-92	Nut, Regular Hexagon Jam
2	1	M250-528-01	Seal, Rectangual Ring
3	1	M321-501-93	Adapter, Filter Head
4	1	M250-575-01	Filter, Fuel Primary
5	1	M250-529-01	Seal, Rectangualr Ring
	1	M509-556-01	Head, Fuel Filter
6	1	(M321-501-94)	Ball
7	1	(M321-501-95)	Adapter, Filter Head
8	1	M321-501-96	Head, Fuel Filter
9	1	M250-576-01	Filter, Fuel Secondary

Dry Systems® Technologies

FUEL FILTER PLUMBING

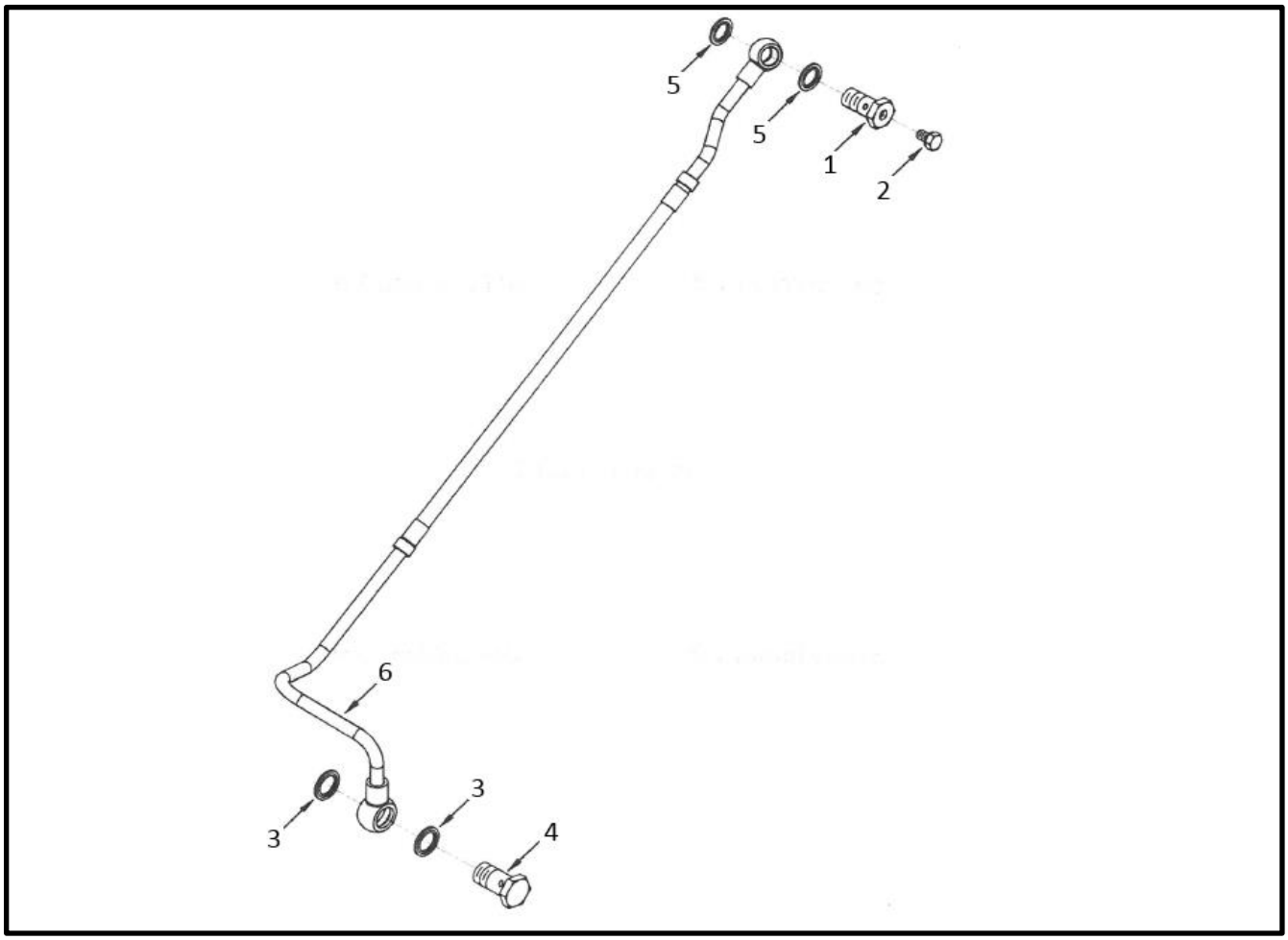

Item	Qty	Part Number	Description
1	1	M509-572-01	Screw, Banjo Connector
2	1	M509-571-01	Screw, Captive Washer Cap
3	2	M509-514-01	Washer, Sealing
4	1	M509-518-01	Screw, Banjo Connector
5	2	M506-535-01	Washer, Sealing
6	1	M250-563-01	Tube, Fuel Supply

FLYWHEEL HOUSING

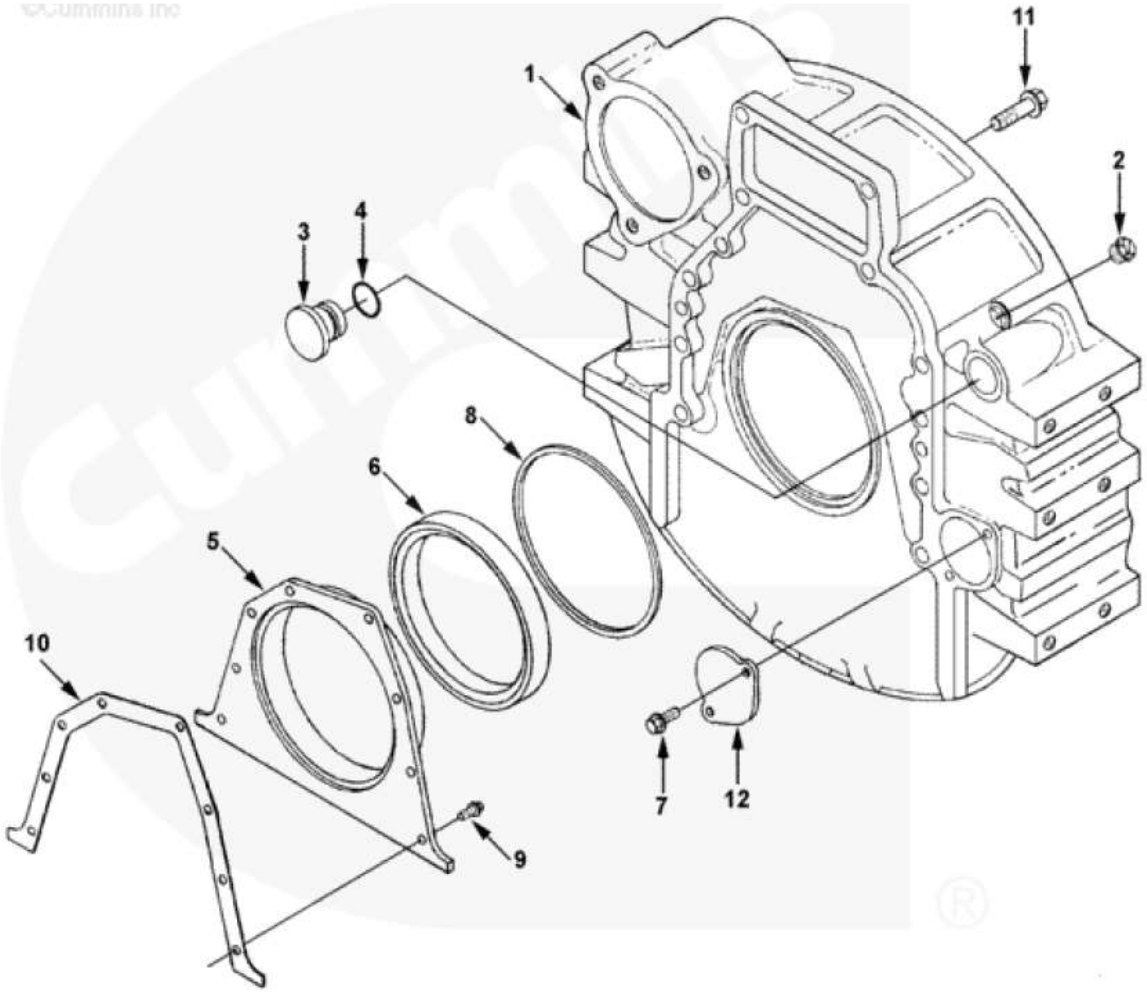

Dry Systems® Technologies

FLYWHEEL HOUSING

Item	Qty	Part Number	Description
1	1	M508-509-01	Housing, Flywheel
2	1	M321-501-98	Plug, Threaded
3	1	M509-510-01	Plug, O-Ring
4	1	M509-511-01	Seal, O-Ring
5	1	M321-501-97	Cover, Rear
6	1	M510-596-01	Seal, Oil
7	2	M321-501-285	Screw, Hex Head Cap
8	1	M321-501-99	Seal, Rectangular Ring
9	8	M321-501-61	Screw, Hex Flange Head Cap
10	1	M321-501-102	Gasket, Rear Cover
11	12	M321-501-100	Screw, Hex Flange Head Cap
12	1	M321-501-101	Plate, Cover
			SERVICE KIT
	A/R	M321-501-103	Rear Crankcase Service Kit

Dry Systems® Technologies

FUEL INLET FITTING

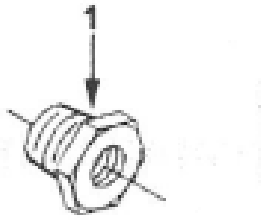

Item	Qty	Part Number	Description
1	1	M321-501-104	Bushing, Reducing Pipe

Dry Systems® Technologies

FUEL PUMP LUBE PLUMBING

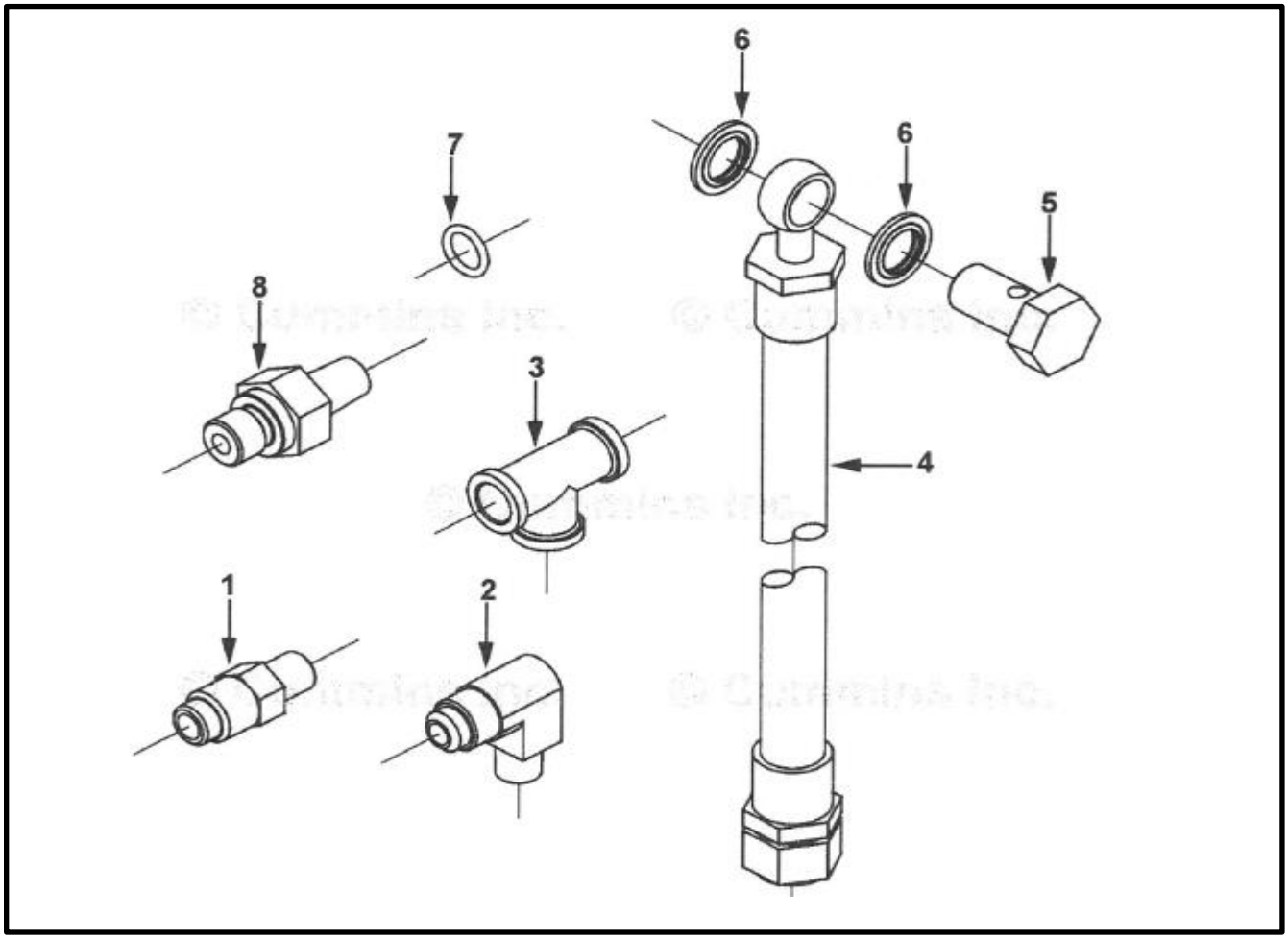

Item	Qty	Part Number	Description
1	1	M321-501-105	Connector, Male
2	1	M321-501-106	Elbow, Male adapter
3	1	M321-501-107	Tee, Female Pipe
4	1	M508-543-01	Hose, Flexible
5	1	M508-544-01	Screw, Banjo Connector
6	2	M508-545-01	Washer, sealing
	1	M509-555-01	Connector, Male
7	1	M321-501-08	Seal, O-Ring
8	1	M321-501-108	Connector, Male

Dry Systems® Technologies

FUEL PUMP LBC PLUMBING

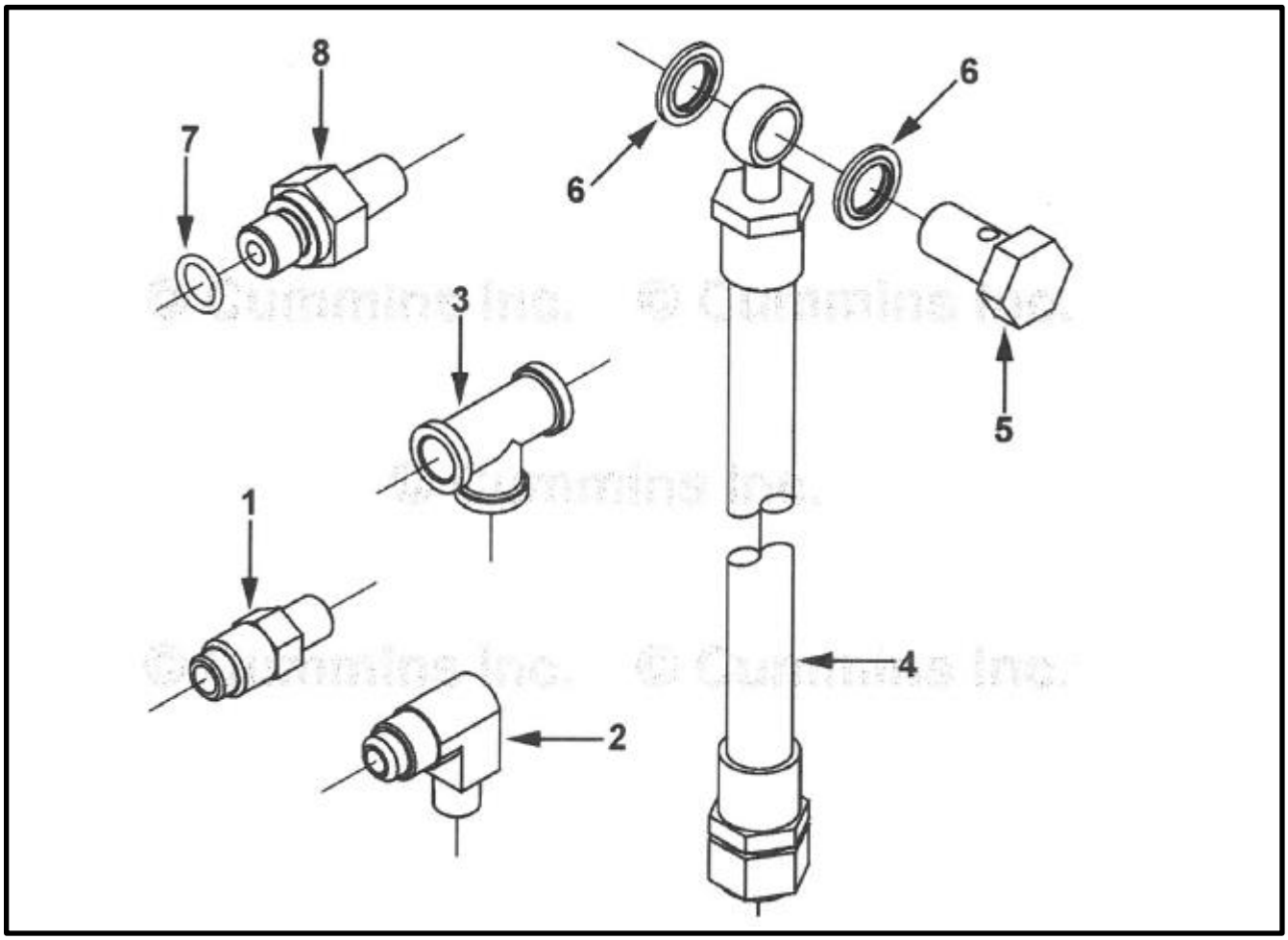

Item	Qty	Part Number	Description
1	1	M321-501-105	Connector, Male
2	1	M321-501-106	Elbow, Male adapter
3	1	M321-501-107	Tee, Female Pipe
4	1	M508-543-01	Hose, Flexible
5	1	M508-544-01	Screw, Banjo Connector
6	2	M508-545-01	Washer, sealing
	1	M509-555-01	Connector, Male
7	1	M321-501-08	Seal, O-Ring
8	1	M321-501-108	Connector, Male

Dry Systems® Technologies

FUEL PUMP MOUNTING

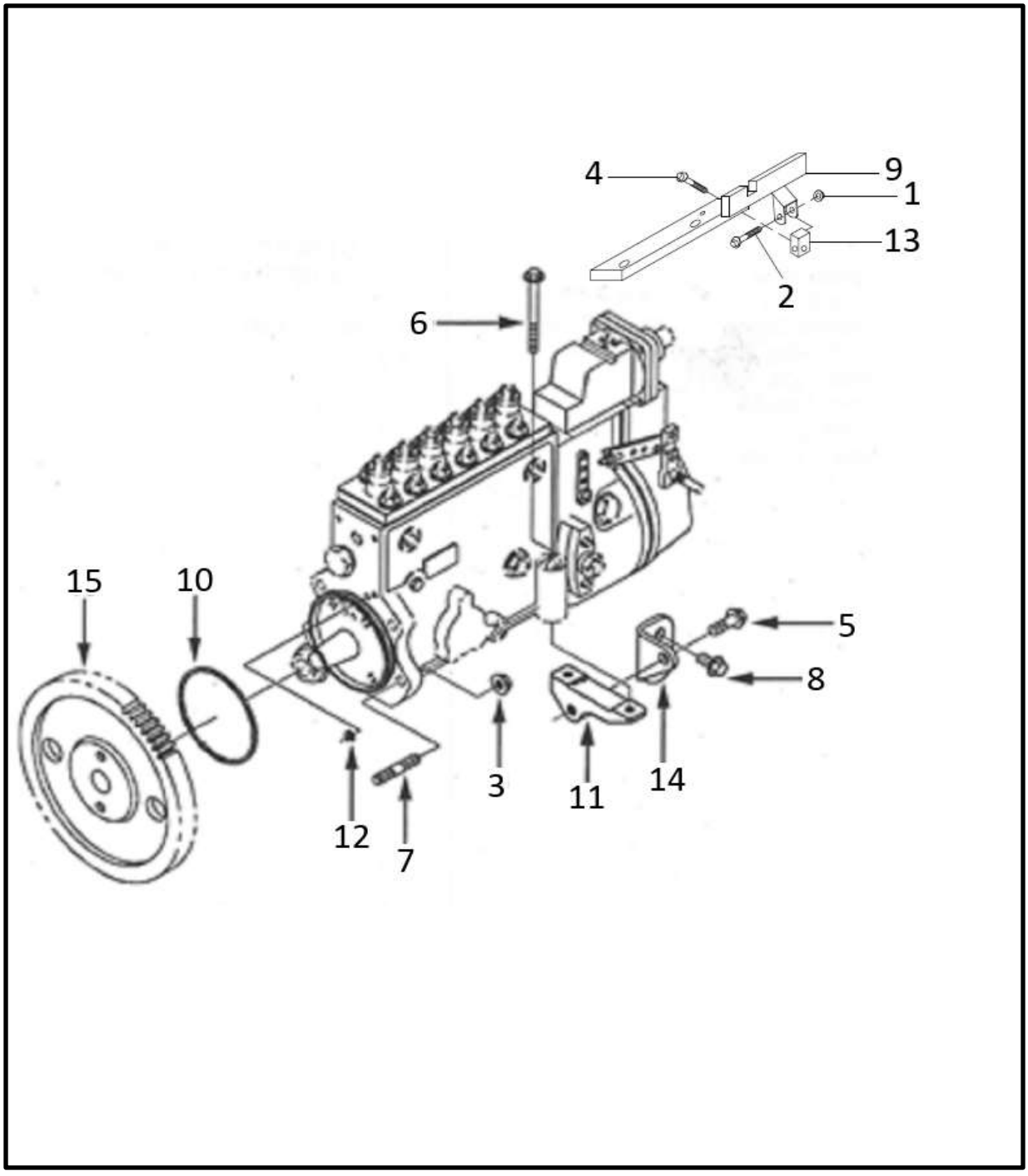

Dry Systems® Technologies

FUEL PUMP MOUNTING

Item	Qty	Part Number	Description
		M250-543-01	Pump, Fuel Injection, Cummins C8.3 185 HP
1	1	M509-545-01	Nut, Hexagon Flange
2	1	M508-551-09	Screw, Hex Flange Head Cap
3	4	M321-501-109	Nut, Hexagon Flange
4	1	M321-501-110	Screw, Hex Flange Head Cap
5	2	M250-517-01	Screw, Hex Flange Head Cap
6	2	M321-501-111	Screw, Hex Flange Head Cap
7	4	M321-501-112	Stud
8	1	M321-501-113	Screw, Hex Flange Head Cap
9	1	M250-520-01	Bracket, Fuel Lines
10	1	M321-501-114	Seal, O-Ring
11	1	M321-501-115	Support, Fuel Pump
12	1	M321-501-116	Seal, Rectangular Ring
13	1	M250-619-01	Support, Fuel Pump
14	1	M321-501-117	Support, Fuel Pump
15	1	M321-501-118	Gear, Fuel Pump

Dry Systems® Technologies

FUEL TRANSFER PUMP

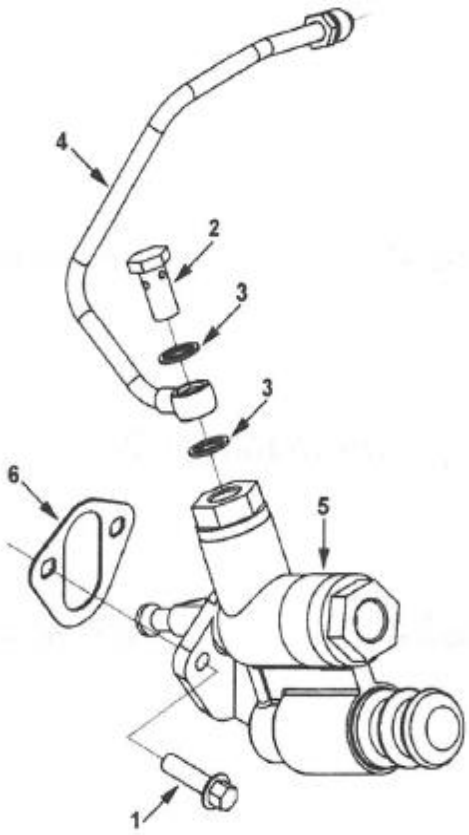

Item	Qty	Part Number	Description
1	2	M321-501-119	Screw, Hexagon Head Cap
2	1	M508-597-01	Screw, Banjo Connector
3	2	M506-535-01	Washer, Sealing
4	1	M508-612-01	Tube, Fuel Supply
5	1	M505-510-01	Pump, Fuel Transfer
6	1	M505-511-01	Gasket, Cover Plate

Dry Systems® Technologies

FUEL PLUMBING

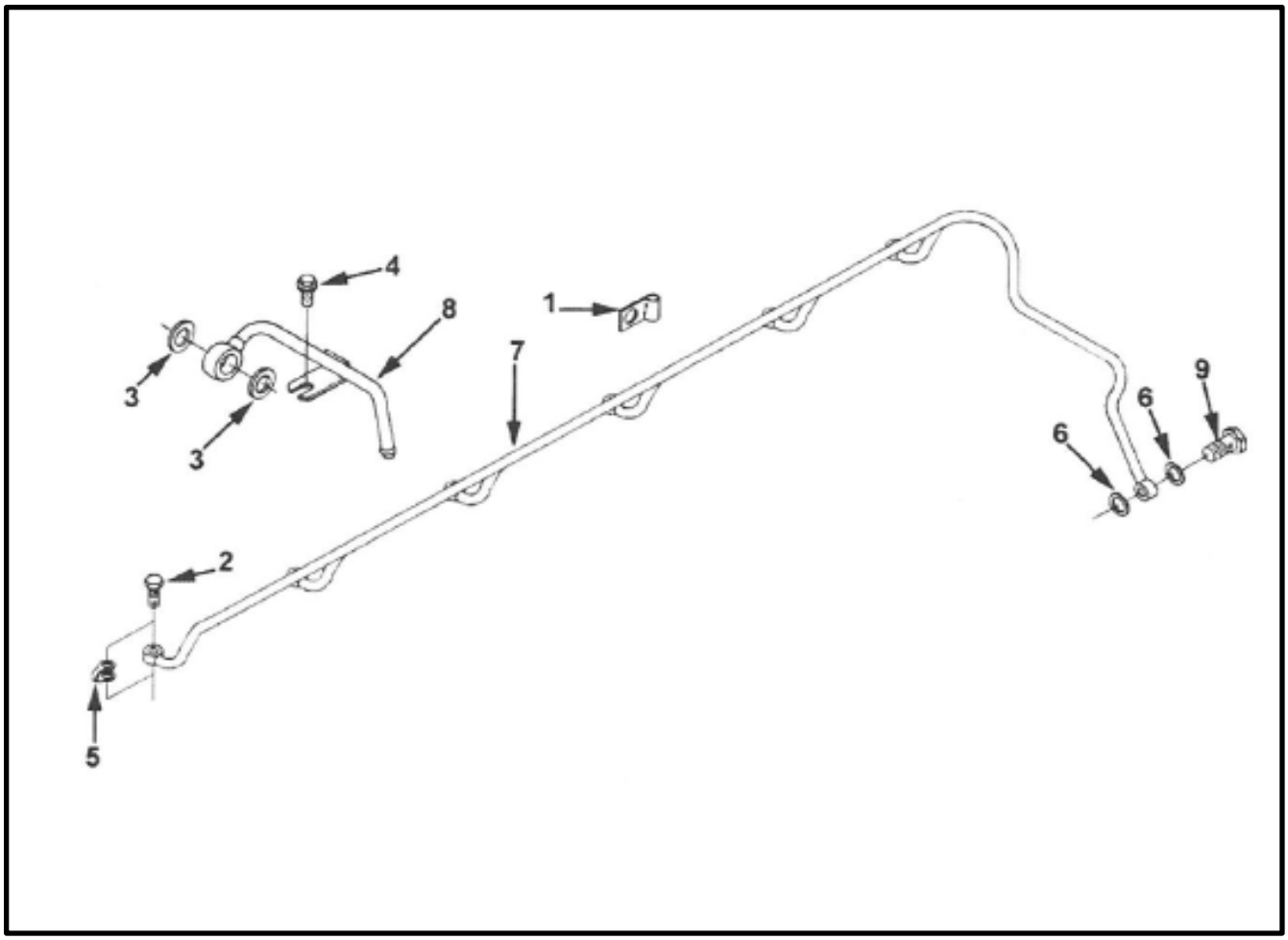

Item	Qty	Part Number	Description
1	1	M509-512-01	Clip
2	6	M509-513-01	Screw, Banjo Connector
3	2	M509-514-01	Washer, Sealing
4	1	M509-515-01	Screw, Hex Flange Head Cap
5	6	M250-530-01	Seal, Banjo Connector
6	2	M250-531-01	Washer, Sealing
7	1	M505-527-01	Manifold, Fuel
8	1	M507-592-03	Tube, Fuel Drain
9	1	M507-594-01	Valve, Check
		M509-589-01	Overflow valve used with #8

FUEL SHUTOFF VALVE

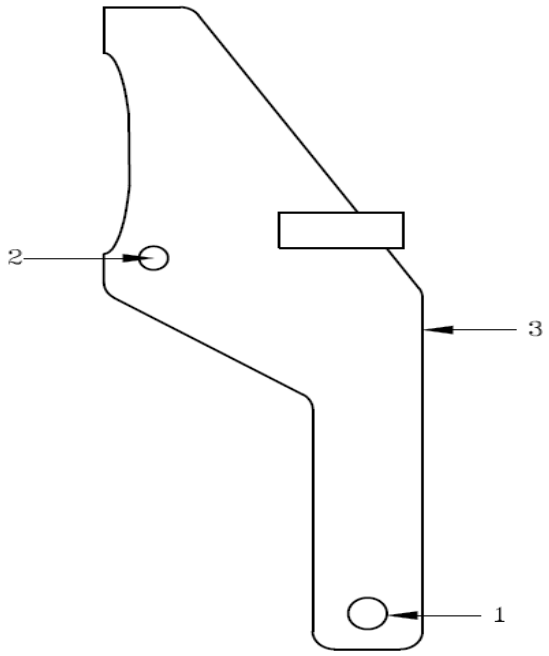

Item	Qty	Part Number	Description
1	1	M250-517-01	Screw, Hex Flange Head Cap
2	1	M250-514-01	Screw, Hex Flange Head Cap
3	1	M250-519-01	Mounting Bracket, Shut Down

FLYWHEEL

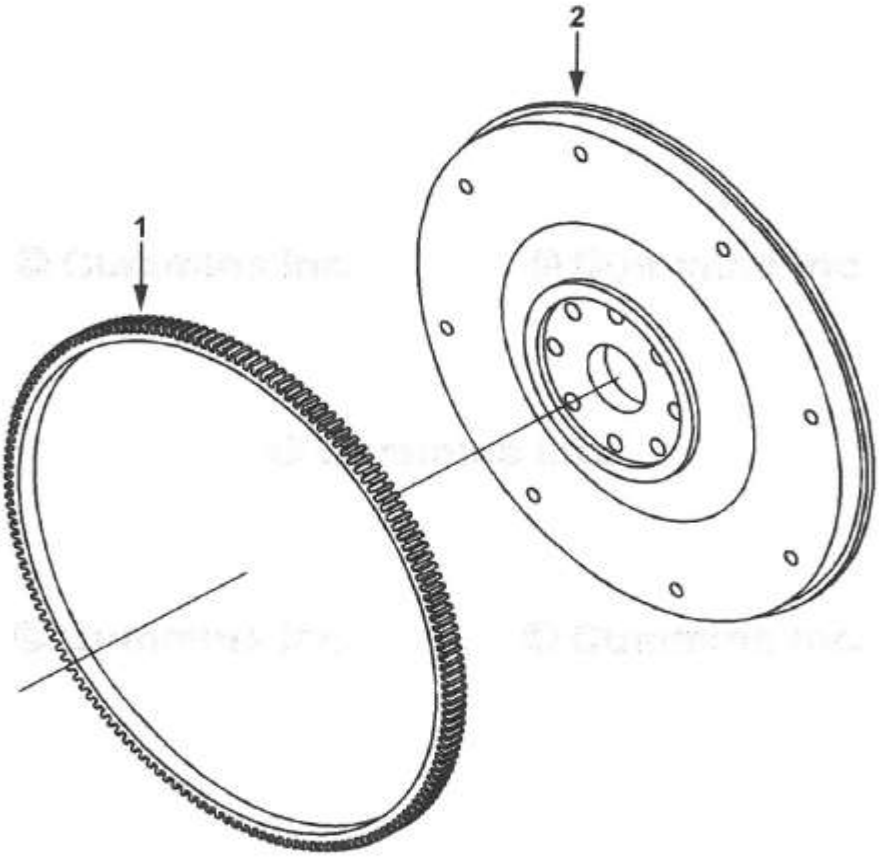

Item	Qty	Part Number	Description
	1	M321-501-288	Flywheel
1	1	M508-510-03	Gear, Flywheel Ring
2	1	M321-501-289	Flywheel

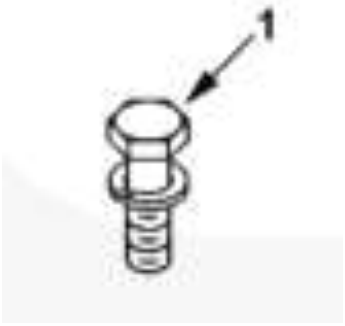

Item	Qty	Part Number	Description
1	8	M509-576-01	Screw, Captive Washer Cap

Dry Systems® Technologies

GEAR COVER MOUNTING

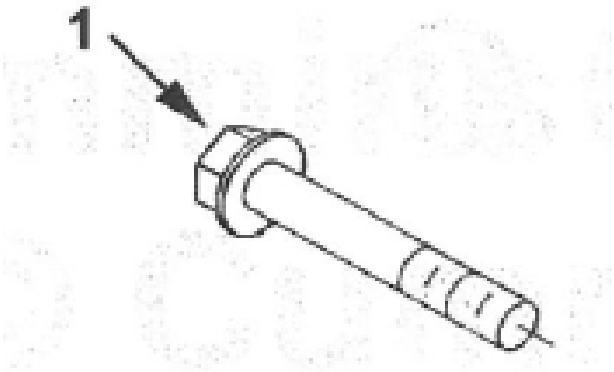

Item	Qty	Part Number	Description
1	2	M510-548-01	Screw, Studded Flange Cap

Dry Systems® Technologies

FRONT GEAR COVER

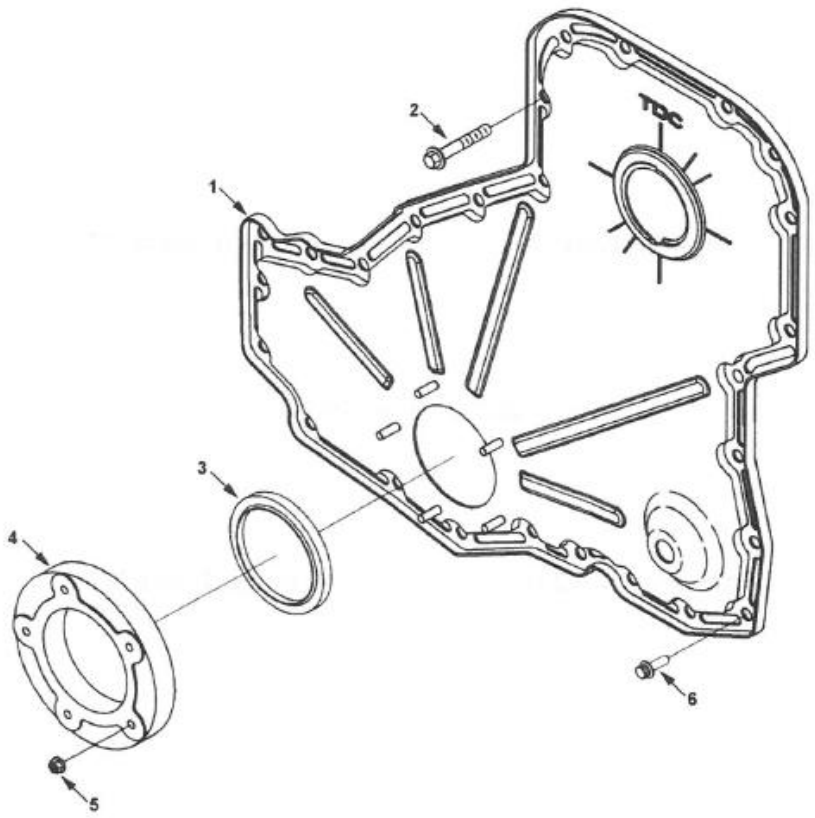

Item	Qty	Part Number	Description
1	1	M510-549-01	Cover, Gear
2	11	M510-550-01	Screw, Hex Flange Head Cap
3	1	M510-551-01	Seal, Oil
4	1	M321-501-121	Carrier, Seal
5	5	M321-501-122	Nut, Lock
6	13	M510-552-01	Screw, Twelve Point Cap

CABIN HEATER PLUMBING

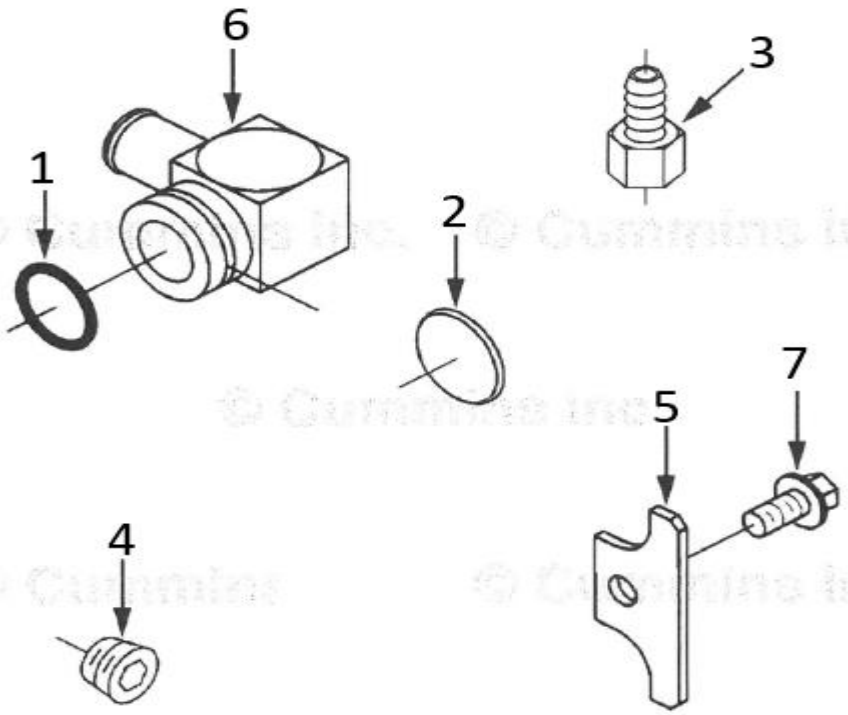

Item	Qty	Part Number	Description
1	1	M321-501-123	Seal, O-Ring
2	1	M321-501-124	Plug, Expansion
3	1	M321-501-125	Coupling, Plain Hose
4	1	M321-501-126	Plug, Pipe
5	1	M321-501-127	Plate, Clamping
6	1	M321-501-128	Connection, Water Transfer
7	1	M250-532-04	Screw, Hex Flange Head Cap

Dry Systems® Technologies

AIR INTAKE MANIFOLD

Item	Qty	Part Number	Description
	1	M321-501-03	Plug, Threaded, W/Seal
	1	M321-501-04	Seal, O-Ring
	18	M321-501-129	Screw, Hex Flange Head Cap
	1	M250-291-01	Gasket, Intake Manifold Cover
	1	M250-290-01	Cover, Intake Manifold

Dry Systems® Technologies

LIFTING ARRANGEMENT

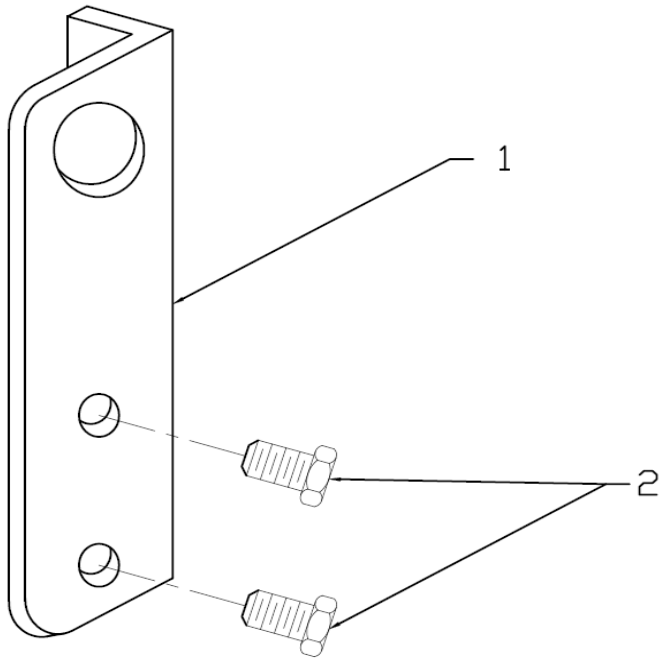

Item	Qty	Part Number	Description
1	1	M250-211-01	Bracket, Lifting
2	2	M321-501-50	Screw, Hex Flange Head Cap

Dry Systems® Technologies

ENGINE OIL COOLER

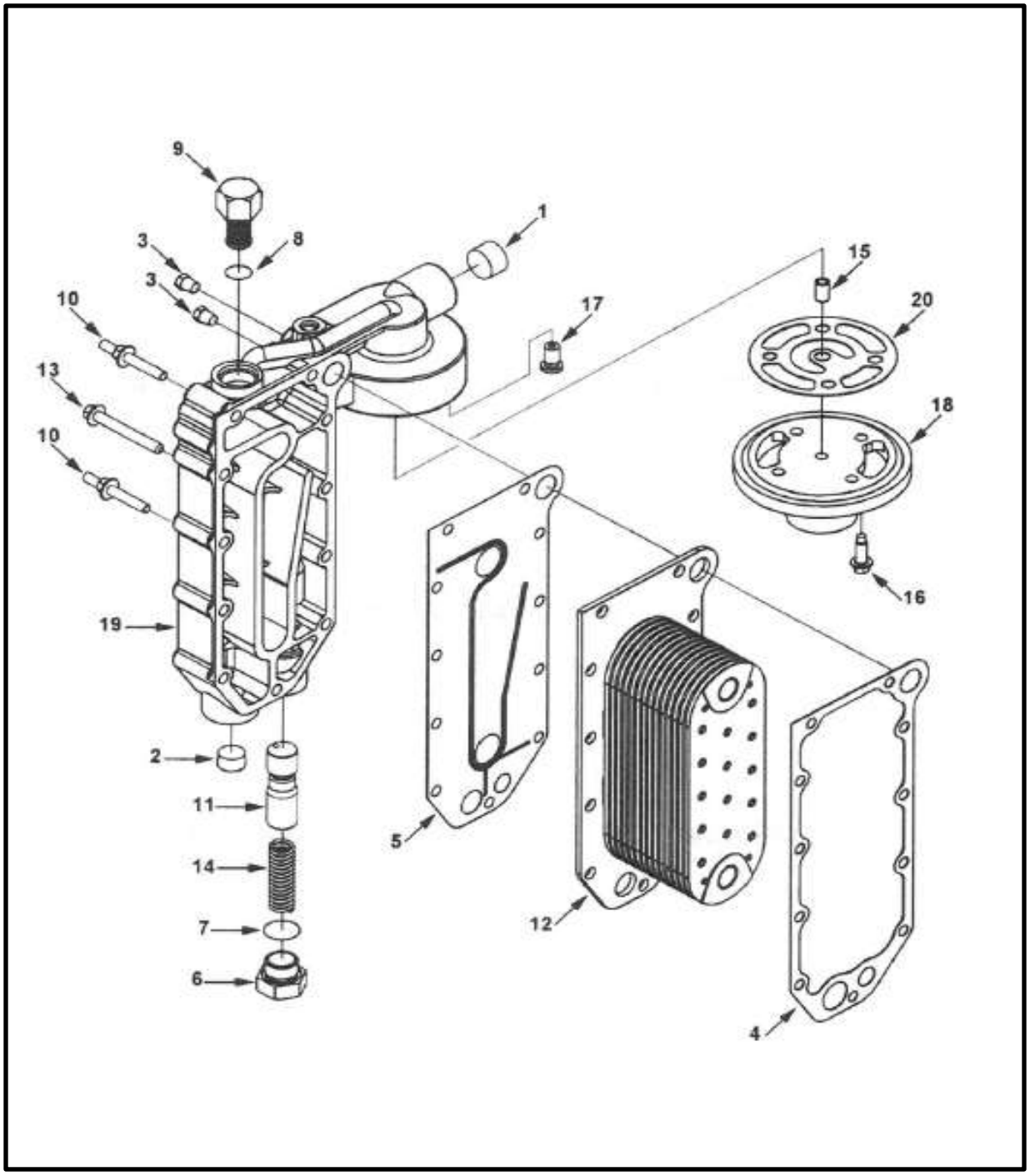

Dry Systems® Technologies

ENGINE OIL COOLER

Item	Qty	Part Number	Description
1	1	M321-501-130	Plug, Pipe
2	1	M321-501-126	Plug, Pipe
3	2	M321-501-131	Plug, Pipe
4	1	M509-580-01	Gasket, Oil Cooler Core
5	1	M509-581-01	Gasket, Lube Oil Cooler Cover
	1	M321-501-132	Plug, Threaded
6	1	M321-501-133	Plug, Threaded
7	1	M321-501-134	Seal, O-Ring
	1	M321-501-135	Valve, Bypass
8	1	M321-501-136	Seal, O-Ring
9	1	M321-501-137	Valve, Bypass
10	2	M321-501-138	Screw, Studded Flange Cap
11	1	M321-501-139	Plunger, PRS Regulator
12	1	M509-579-01	Core, Cooler
13	9	M321-501-140	Screw, Hex Flange Head Cap
14	1	M321-501-141	Spring, Compression
	1	M321-501-142	Head, Lube Oil Filter
15	1	M321-501-143	Dowel, Ring
16	4	M321-501-144	Screw, Hex Flange Head Cap
17	1	M508-551-18	Valve, Pressure Relief
18	1	M321-501-145	Head, Lube Oil Filter
19	1	M321-501-146	Cover, Lube Oil Cooler
20	1	M321-501-147	Gasket, Connection

Dry Systems® Technologies

FULL FLOW OIL FILTER

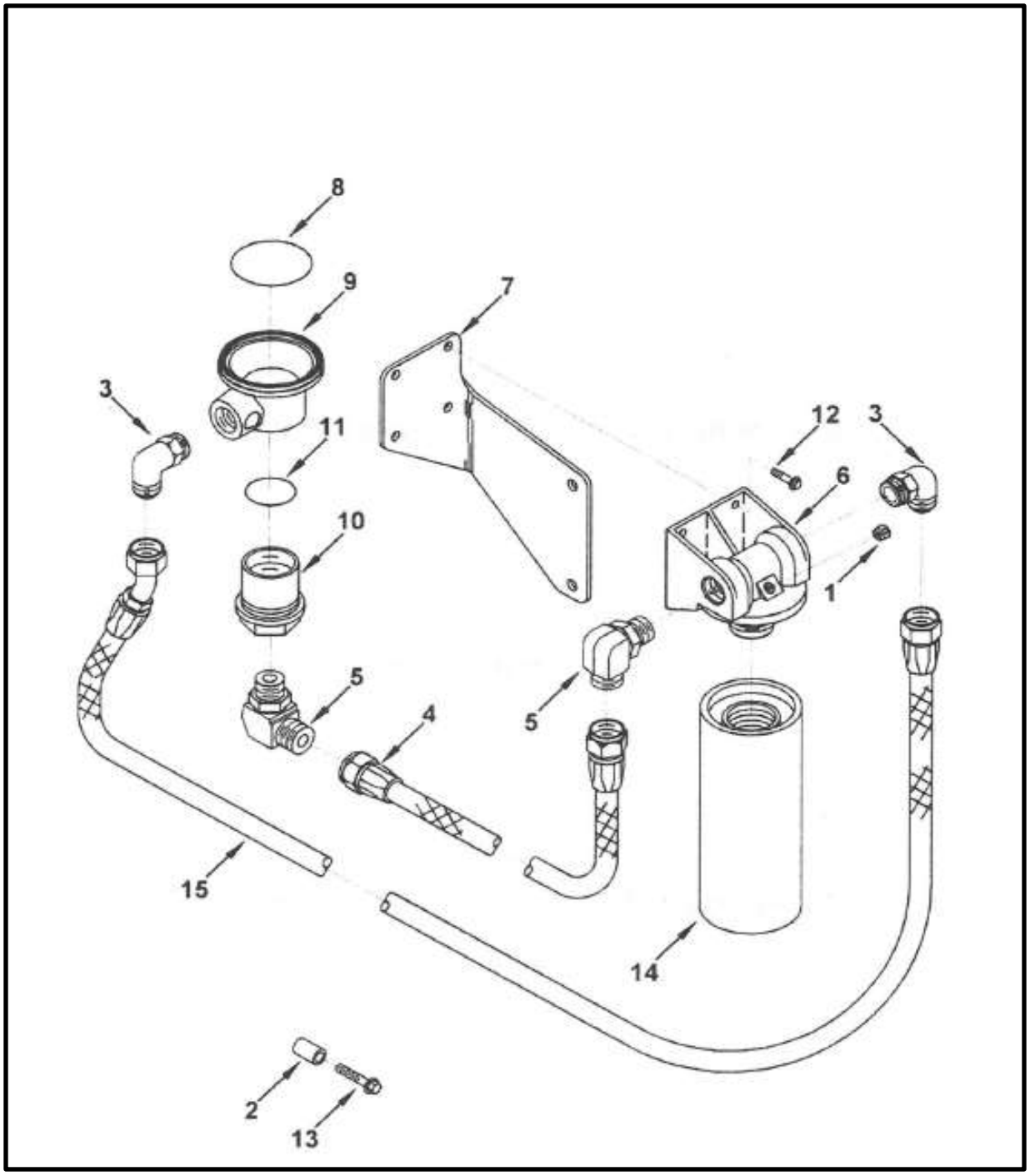

Dry Systems® Technologies

FULL FLOW OIL FILTER

Item	Qty	Part Number	Description
1	1	M250-505-02	Plug, Pipe
2	1	M250-505-03	Spacer, Mounting
3	2	M250-505-04	Elbow,Male Union
4	1	M250-505-05	Hose, Flexible
5	2	M250-505-06	Elbow, Male Adapter
6	1	M250-505-07	Head, Lube Oil Filter
7	1	M250-505-08	Bracket, Filter
8	1	M250-505-09	Seal, O-Ring
9	1	M250-505-10	Cover, Filter Head
10	1	M250-505-11	Adapter, Filter Head
11	1	M250-505-12	Seal, O-Ring
12	4	M250-505-13	Screw, Hex Flange Head Cap
13	1	M250-505-14	Screw, Hex Flange Head Cap
14	1	M250-574-01	Element, Lube Oil Filter
15	1	M250-505-15	Hose, Flexible

Dry Systems® Technologies

OIL LEVEL GAUGE

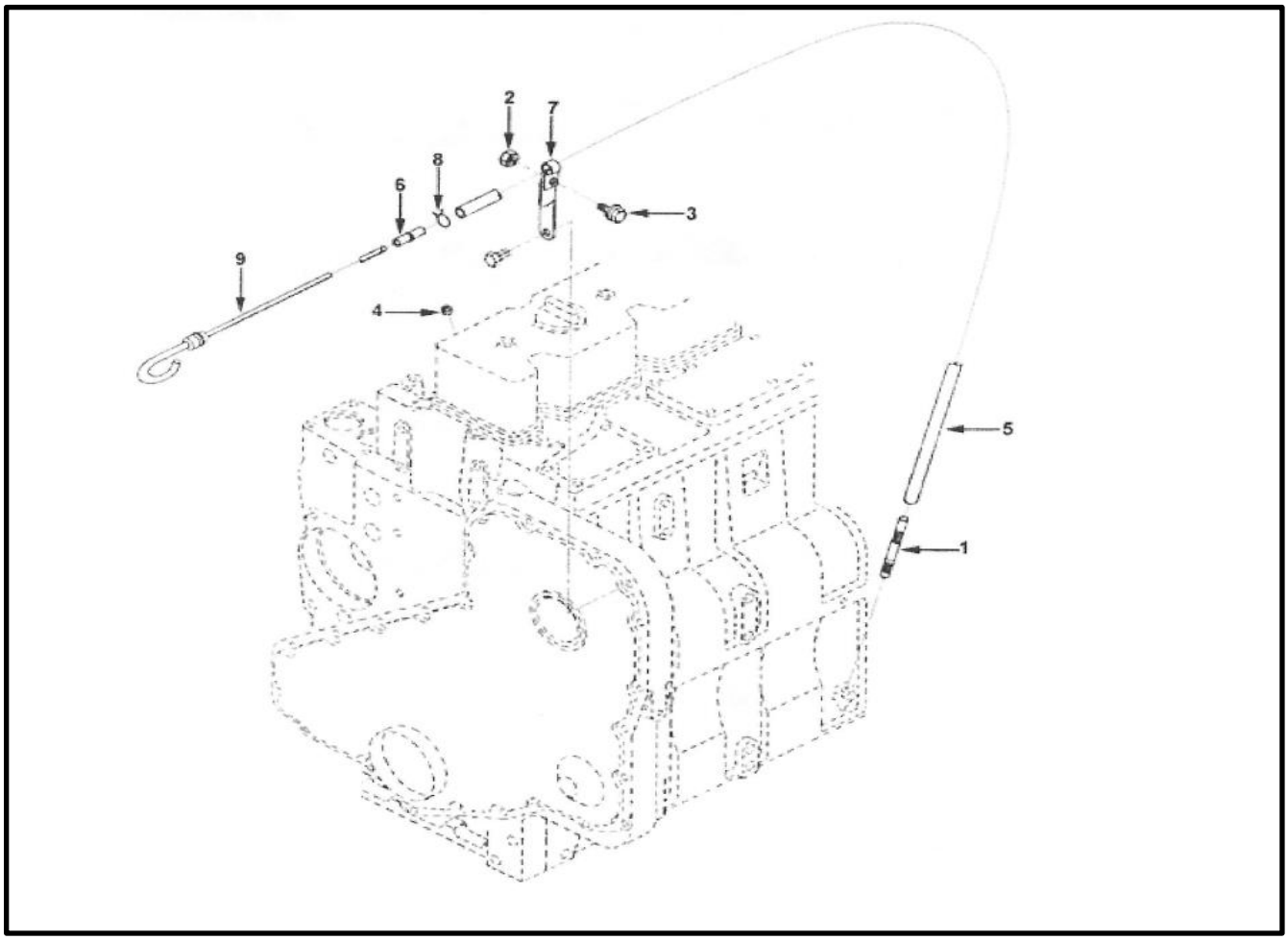

Item	Qty	Part Number	Description
	1	M250-532-01	Kit, Extended Dipstick
1	1	M250-532-02	Tube, Oil Gauge
2	1	M250-532-03	Nut, Regualr Hexagon
3	1	M250-532-04	Screw, Hex Flange Head Cap
4	1	M250-532-05	Plug, Expansion
5	1	M250-532-06	Tube, Oil Gauge
6	1	M250-532-07	End, Oil Gauge Tube
7	1	M250-532-08	Brace, Tube
8	2	M250-532-09	Clamp, Spring Hose
9	1	M250-532-10	Dipstick

LUBE OIL PUMP

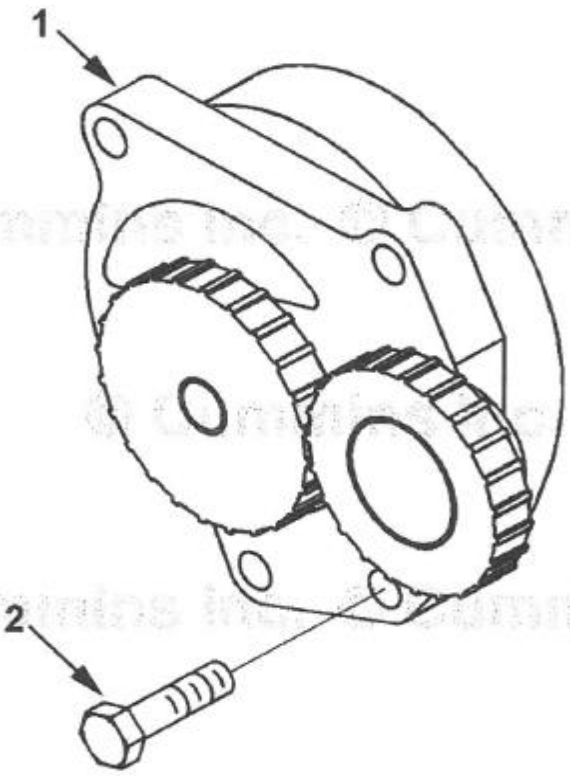

Item	Qty	Part Number	Description
1	1	M321-501-148	Pump, Lubricating Oil
2	4	M321-501-149	Screw, Hexagon Head Cap

Dry Systems® Technologies

OIL FILLER ARRANGEMENT

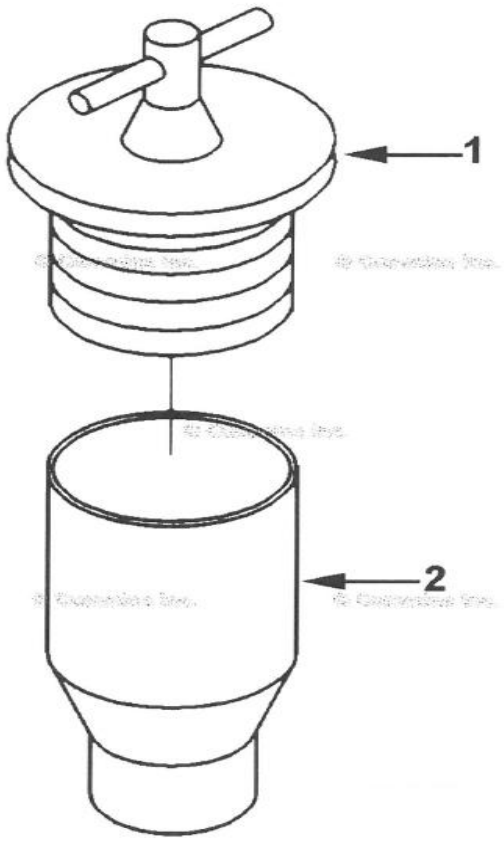

Item	Qty	Part Number	Description
1	1	M250-533-02	Cap, Filler
2	1	M321-501-150	Tube, Oil Filler

Dry Systems® Technologies

OIL PAN

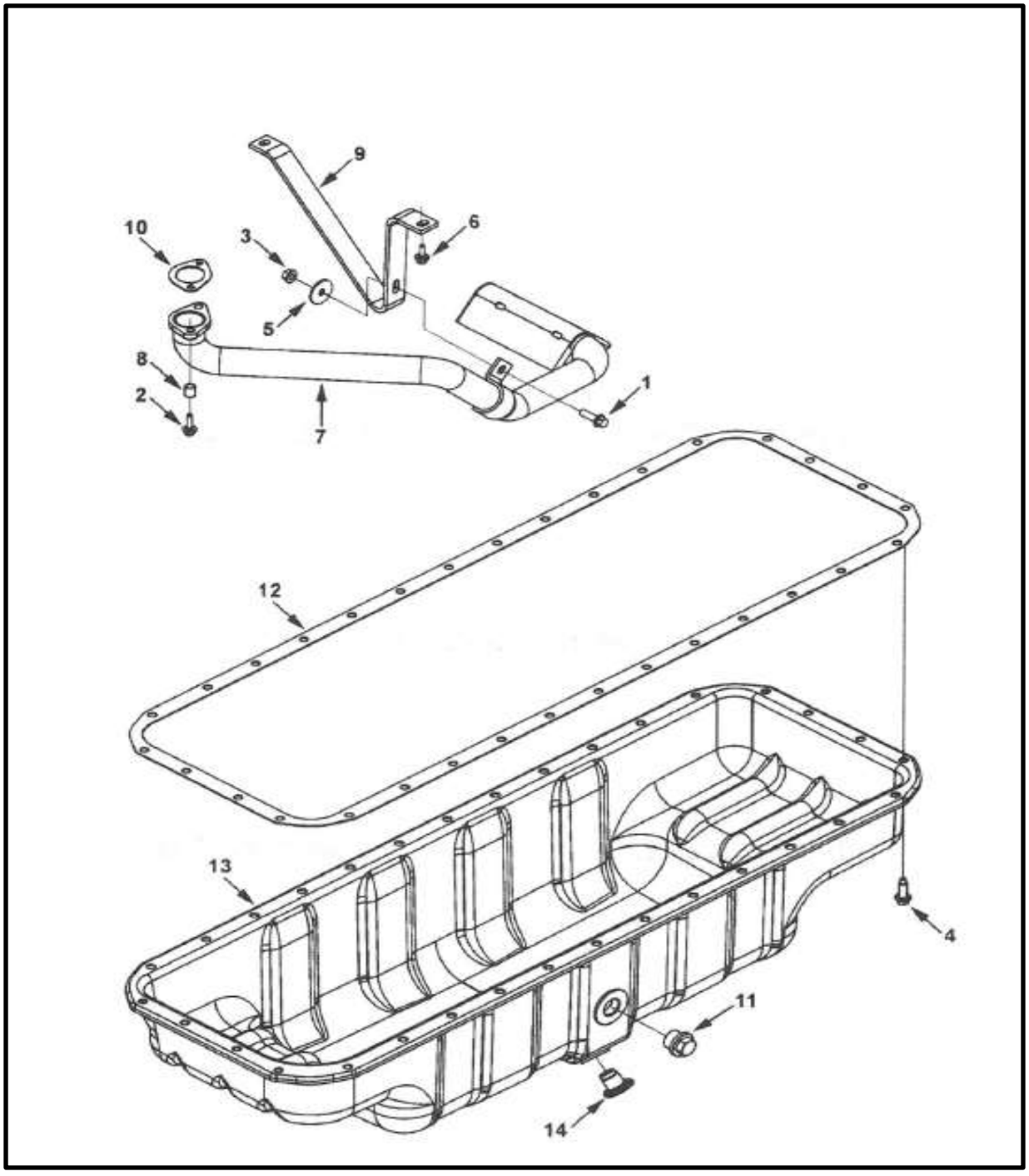

Dry Systems® Technologies

OIL PAN

Item	Qty	Part Number	Description
1	2	M321-501-151	Screw, Hex Flange Head Cap
2	1	M321-501-152	Screw, Hex Flange Head Cap
3	1	M321-501-153	Nut, Hexagon Flange
4	32	M321-501-154	Screw, Hex Flange Head Cap
5	1	M321-501-155	Washer, Plain
6	2	M509-538-01	Screw, Hex Flange Head Cap
7	1	M509-507-01	Connection, Oil Suction
8	2	M321-501-156	Spacer, Mounting
9	1	M321-501-157	Brace, Tube
10	1	M509-506-01	Gasket, Oil Suction Connection
11	1	M321-501-158	Plug, Threaded
12	1	M509-508-01	Gasket, Oil Pan
13	1	M509-509-01	Pan, Oil
14	1	M321-501-159	Plug, Threaded
15	1	(M321-501-160)	Oil Drain Plug / Right Side (not shown)

Dry Systems® Technologies

ACCESSORY DRIVE PULLEY

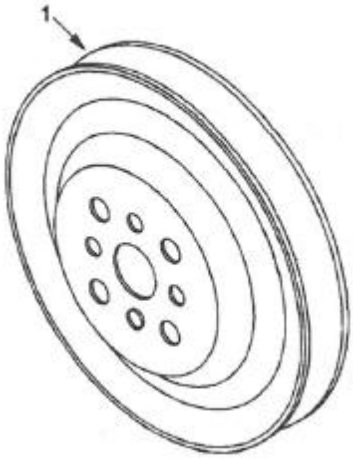

Item	Qty	Part Number	Description
1	1	M506-555-01	Pulley, Accessory Drive

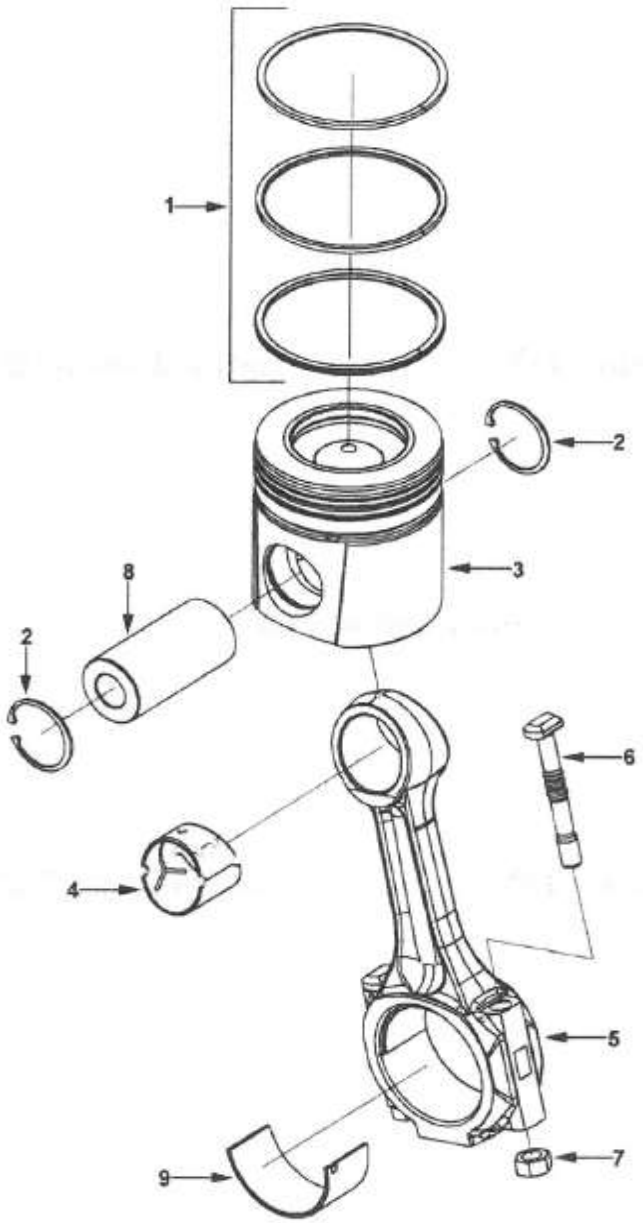
1
2
3
8
2
6
4
5
9
7

Item	Qty	Part Number	Description	
	6	M321-501-161	Kit, Engine Piston	
1	1	M321-501-162	Set, Piston Ring	
	1	(M321-501-163)	Ring, Compression Piston	(sold in higher level assy/kit)
	1	(M321-501-164)	Ring, Oil Piston	(sold in higher level assy/kit)
	1	M321-501-165	Ring, Compression Piston	(sold in higher level assy/kit)
2	2	M321-501-166	Ring, Retaining	
3	1	(M321-501-167)	Piston, Engine	(sold in higher level assy/kit)
	6	M321-501-168	Rod, Engine Connecting	
4	1	M321-501-169	Bushing	
5	1	(M321-501-170)	Rod, Engine Connecting	
6	2	M321-501-171	Bolt, Connecting Rod	
7	2	M321-501-172	Nut, Connecting Rod	
8	6	M321-501-173	Pin, Piston	
9	12	M321-501-174	Bearing, Connecting Rod	(standard)

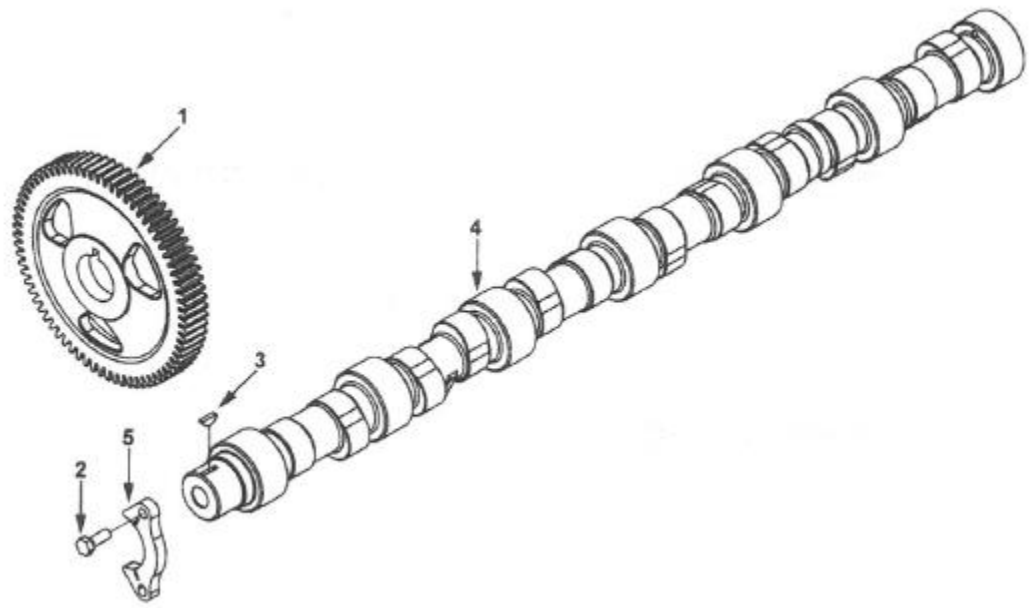

Item	Qty	Part Number	Description
1	1	M321-501-175	Gear, Camshaft
2	2	M321-501-176	Screw, Hexagon Head Cap
3	1	M321-501-177	Key, Plain Woodruff
4	1	M321-501-178	Camshaft
5	1	M321-501-179	Support, Camshaft Thrust

INJECTOR

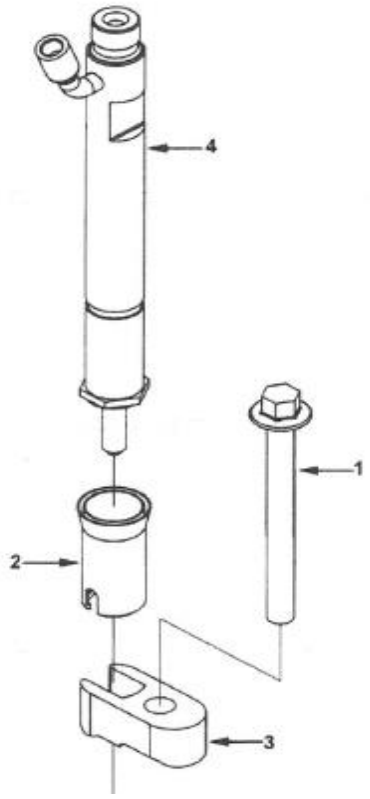

Item	Qty	Part Number	Description
1	6	M509-516-01	Screw, Hex Flange Head Cap
2	6	M508-515-01	Seal, Injector
3	6	M509-517-01	Clamp, Injector
4	6	M250-586-01	Injector

Dry Systems® Technologies

CYLINDER HEAD

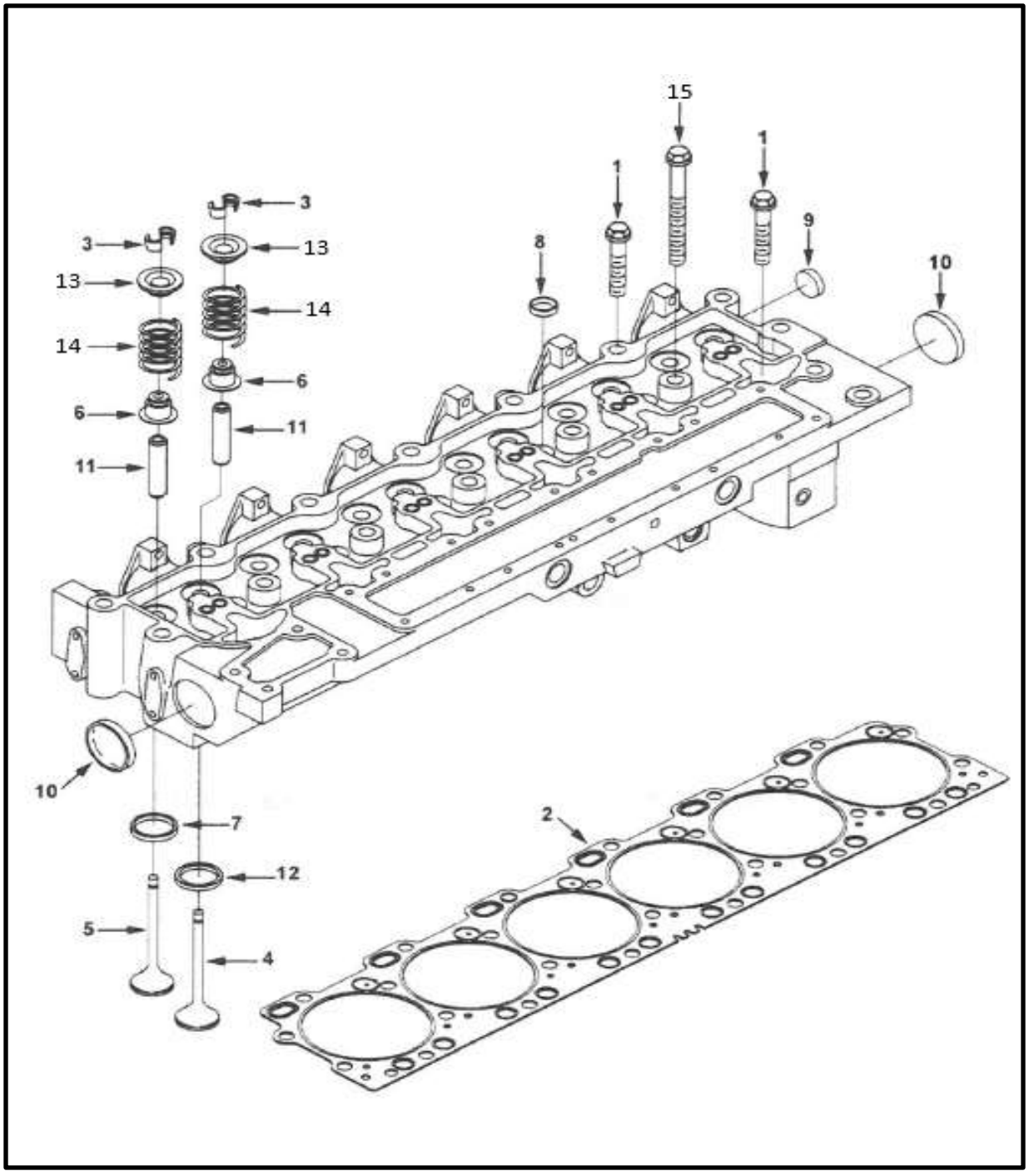

Dry Systems® Technologies

CYLINDER HEAD

Item	Qty	Part Number	Description
		M250-108-01	Cylinder Head, Modified (complete head assy)
1	6	M250-547-01	Screw, Hex Flange Head Cap
2	1	M250-506-01	Gasket, Cylinder Head
3	24	M321-501-180	Collet, Valve
4	6	(M321-501-181)	Valve, Exhaust
5	6	(M321-501-182)	Valve, Intake
6	12	M321-501-183	Seal, Valve Stem
7	6	(M321-501-184)	Insert, Valve (standard)
8	5	(M321-501-185)	Plug, Expansion
9	1	M321-501-186	Plug, Expansion
10	2	M321-501-187	Plug, Expansion
11	12	M321-501-188	Guid, Valve Stem
12	6	M321-501-189	Insert, Valve (exhaust)
13	12	M321-501-190	Retainer, Valve Spring
14	12	M321-501-191	Spring, Valve (intake)
15	20	M250-503-01	Screw, Hex Flange Head Cap

Dry Systems® Technologies

CYLINDER HEAD PLUMBING

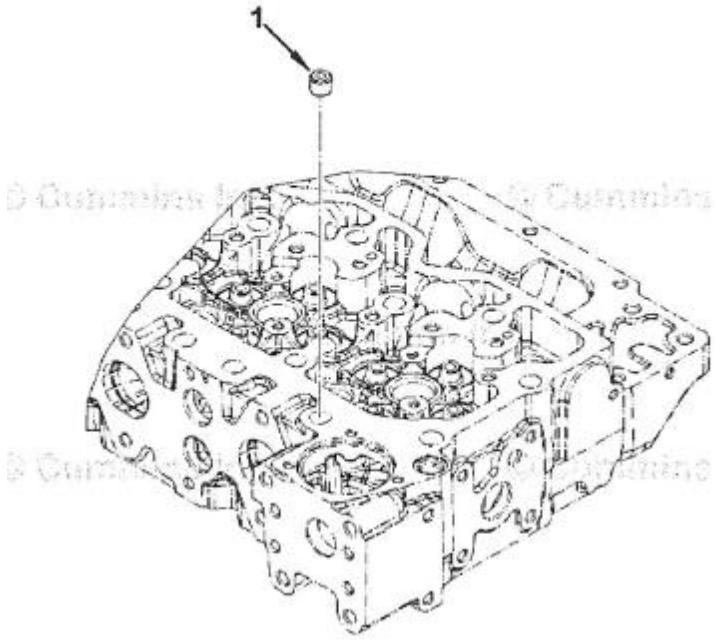

Item	Qty	Part Number	Description
1	1	M321-501-192	Plug, Pipe

Dry Systems® Technologies

TURBOCHARGER

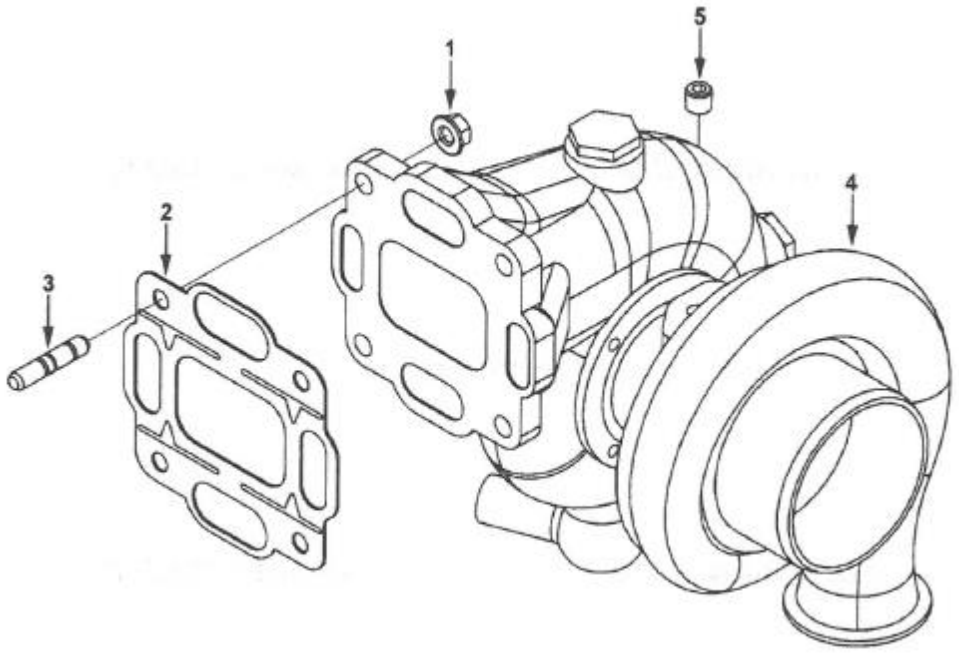

Item	Qty	Part Number	Description
1	4	M600-109-01	Nut, Hexagon Flange
2	1	M250-218-01	Gasket, Turbocharger
3	4	M90-371-14	Stud
4	1	M250-109-21	Turbocharger, Assembly, Modified
5	2	M321-501-91	Plug, Pipe

Dry Systems® Technologies

INJECTOR PLUMBING

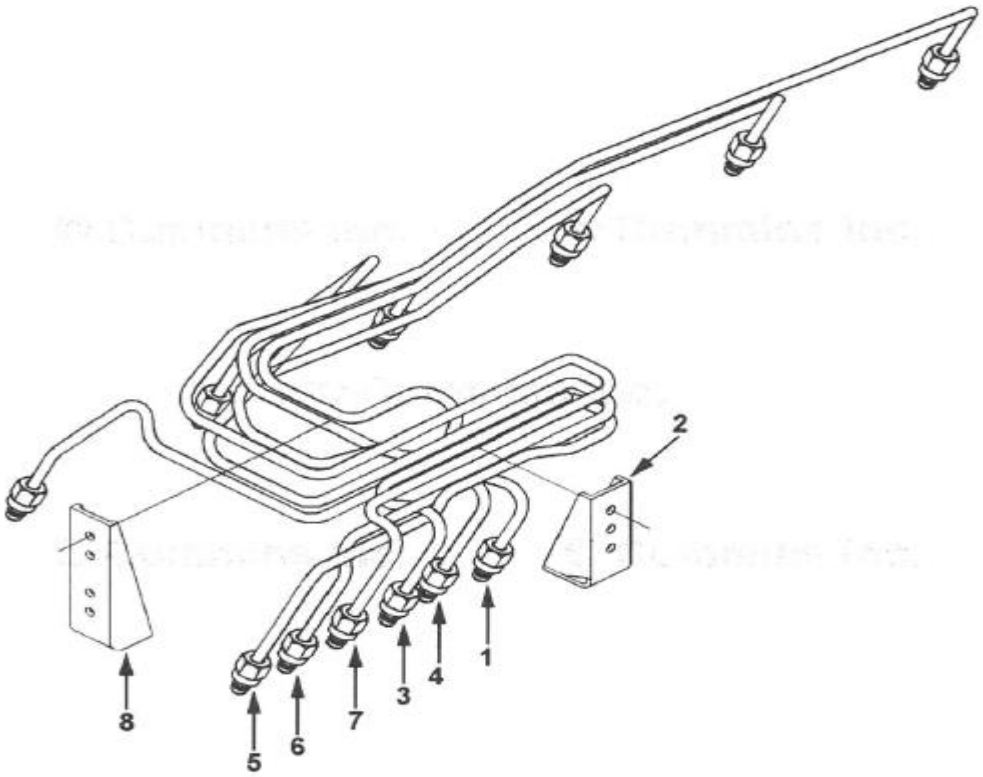

Item	Qty	Part Number	Description	
	1	M510-513-01	Tube, Injector Fuel Supply	
1	1	M510-555-01	Tube, Injector Fuel Supply	# 6 Cylinder
2	1	M321-501-221	Brace Tube	
3	1	M321-501-222	Tube, Injector Fuel Supply	# 4 Cylinder
4	1	M321-501-223	Tube, Injector Fuel Supply	# 5 Cylinder
5	1	M321-501-224	Tube, Injector Fuel Supply	# 1 Cylinder
6	1	M508-593-01	Tube, Injector Fuel Supply	# 2 Cylinder
7	1	M321-501-225	Tube, Injector Fuel Supply	# 3 Cylinder
8	1	M321-501-226	Brace, Tube	

ROCKER LEVER

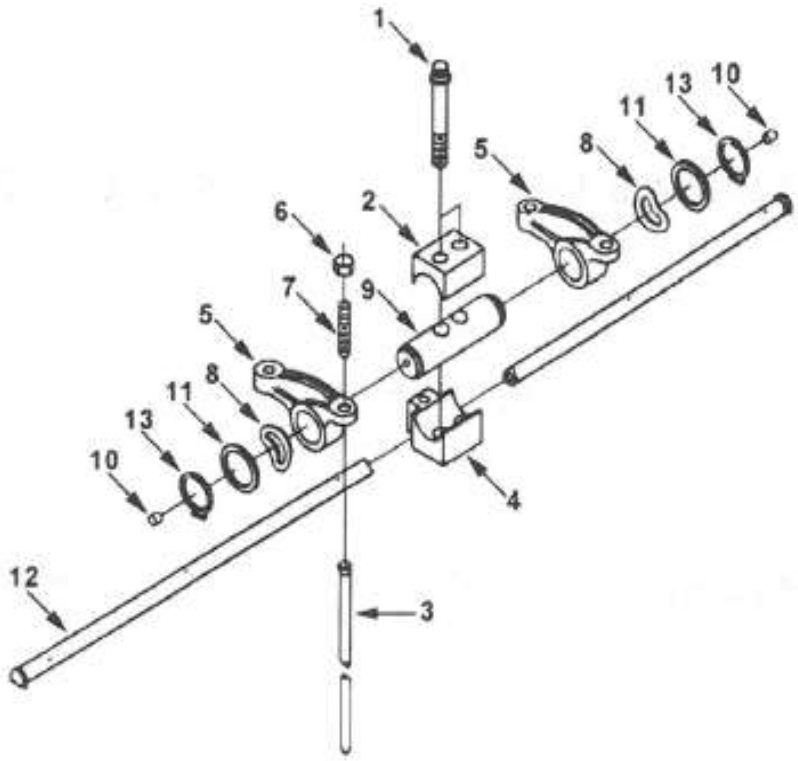

Dry Systems® Technologies

ROCKER LEVER

Item	Qty	Part Number	Description
1	12	M321-501-228	Screw, Twelve Point Cap
2	6	M321-501-229	Clamp, Retaining
3	12	M321-501-230	Rod, Push
4	6	M321-501-231	Support, Rocker Lever
	12	M321-501-232	Lever, Rocker
5	1	(M321-501-233)	Lever, Rocker
6	1	M321-501-234	Nut, Heavy Hexagon
7	1	M321-501-235	Screw, Rocker Lever Adjusting
	1	(M321-501-236)	Insert, Rocker Lever
8	12	M321-501-237	Washer, Spring
	6	M321-501-238	Shaft, Rocker Lever
9	1	(M321-501-239)	Shaft, Rocker Lever
10	1	M321-501-240	Rivet
11	12	M321-501-241	Washer, Plain
12	1	M321-501-242	Manifold, Oil
13	12	M321-501-243	Ring, Retaining

Dry Systems® Technologies

ENGINE COOLANT VENT

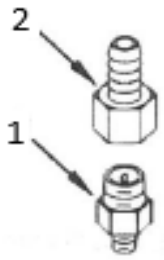

Item	Qty	Part Number	Description
	1	M321-501-245	Valve, Check
1	1	M321-501-246	Valve, Check
2	1	M321-501-247	Coupling, Plain Hose

Dry Systems® Technologies

TACHOMETER DRIVE

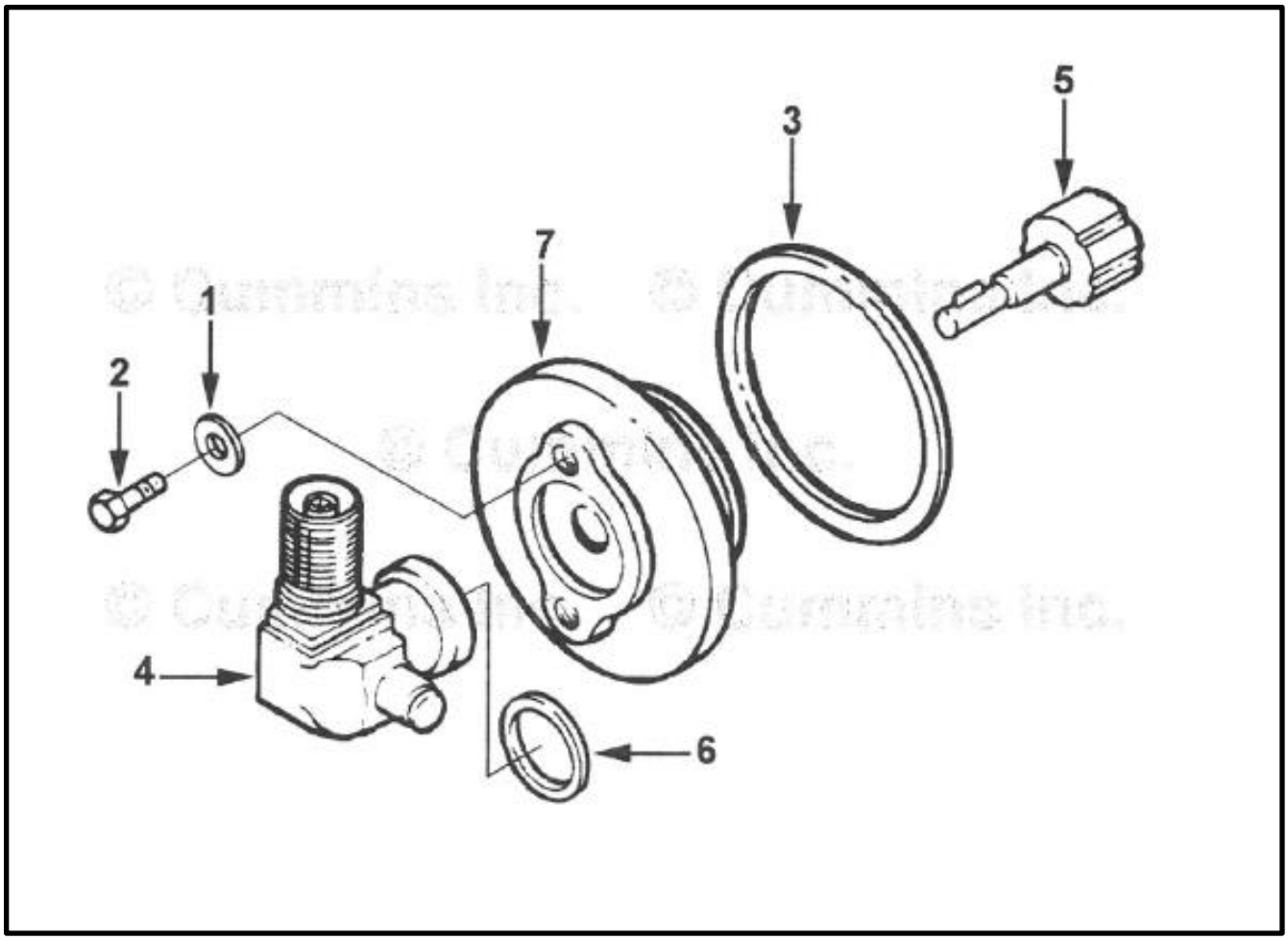

Item	Qty	Part Number	Description
1	2	M506-565-01	Washer, PLain
2	2	M506-566-01	Screw, Hexagon Head Cap
3	1	M505-554-01	Seal, Rectangular Ring
4	1	M502-598-01	Adapter, Angle Drive
5	1	M503-520-01	Hub, Tac Drive Coupling
6	1	M505-555-01	Seal, Rectangular Ring
7	1	M505-556-01	Adapter, Tac Takeoff Drive

Dry Systems® Technologies

EXHAUST MANIFOLD

Item	Qty	Part Number	Description
	1	M250-215-18	Manifold, Exhaust
	6	M250-214-01	Gasket, Exhaust Manifold
	12	M507-560-01	Screw, Hex Flange Head Cap (mounting screws)

Dry Systems® Technologies

TORQUE CONVERTOR OIL COOLER

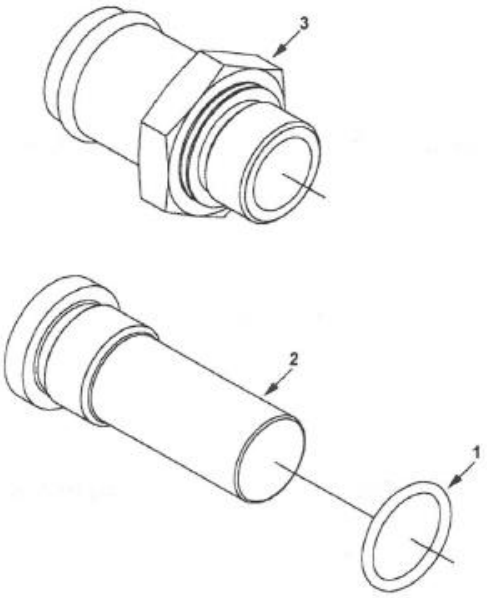

Item	Qty	Part Number	Description
	1	M321-501-248	Plug, Bypass
1	1	M509-563-01	Seal, O-Ring
2	1	(M321-501-249)	Plug, Threaded
3	1	M321-501-250	Coupling, Plain Hose

Dry Systems® Technologies

PLUMBING, TURBOCHARGER

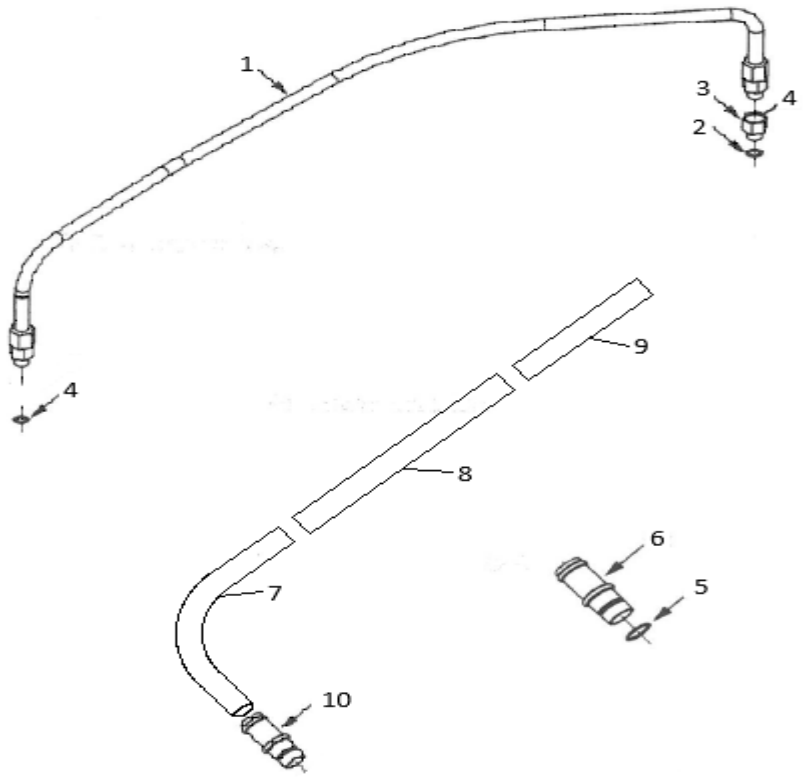

Item	Qty	Part Number	Description
1	1	M508-599-01	Hose, Flexible
2	1	M321-501-251	Seal, O-Ring
3	1	(M321-501-252)	Connector, Female
4	2	M250-298-01	Washer, Sealing
5	1	M321-501-253	Seal, O-Ring
6	1	M321-501-254	Tube, Turbo Oil Drain
	1	M250-553-01	Hose Assy, Turbo Oil Drain (not shown)
7	1	M510-542-03	Hose, Elbow
8	1	M510-542-02	Tube, Turbo Coolant Supply
9	1	M510-542-04	Hose, Plain
10	1	M321-501-125	Coupling, Plain Hose
	4	M600-730-01	Clamp, Hose (not shown)

Dry Systems® Technologies

VALVE COVER

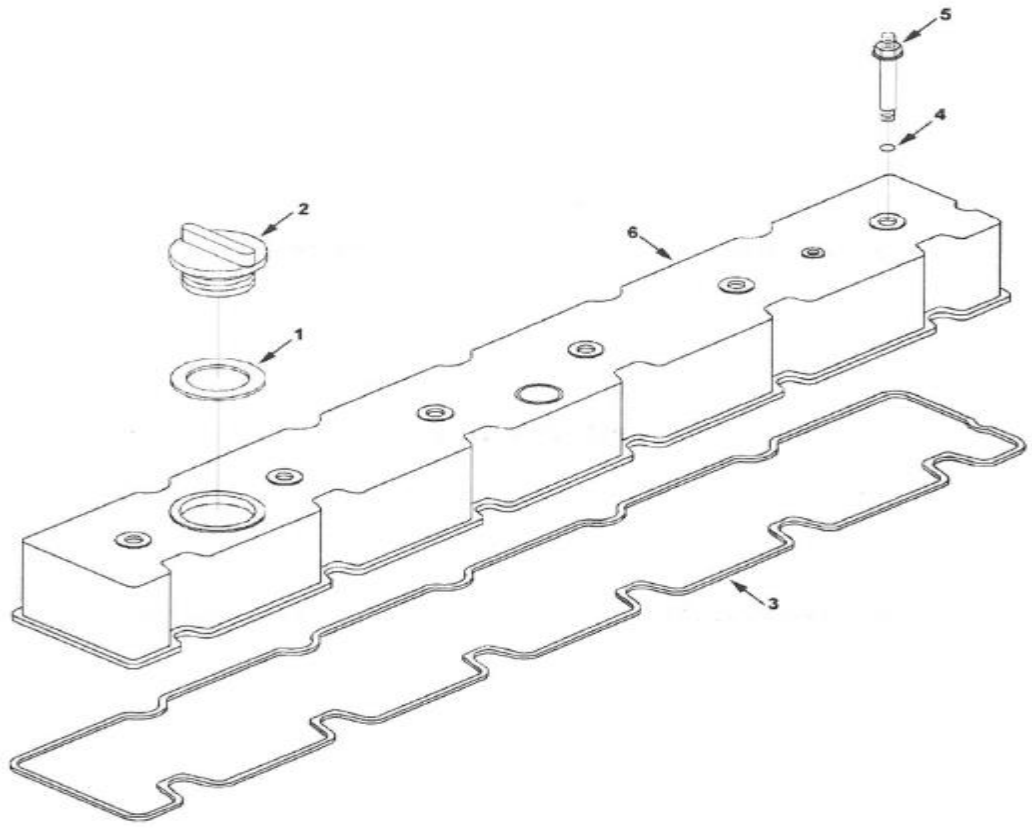

Item	Qty	Part Number	Description
1	1	M250-508-01	Seal, Rectangular Ring
2	1	M506-567-01	Cap, Filler
3	1	M250-507-01	Seal, Rocker Lever Cover
4	6	M250-527-01	Seal, O-Ring
5	6	M506-568-01	Screw, Hex Flange Head Cap
6	1	M506-569-01	Cover, Valve

CORROSION RESISTOR

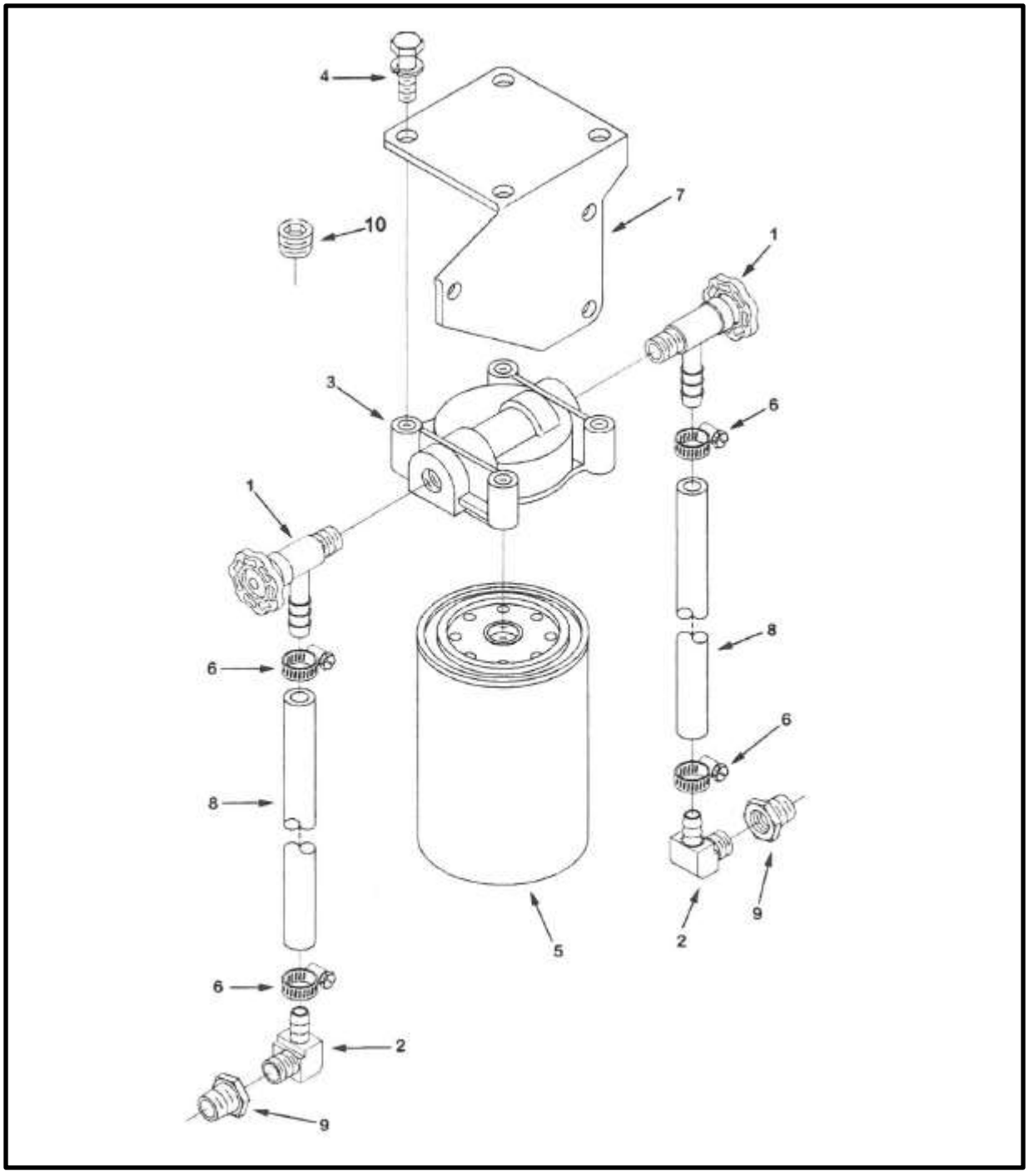

Dry Systems® Technologies

CORRISION RESISTOR

Item	Qty	Part Number	Description
1	2	M508-553-01	Valve, Shutoff
2	2	M321-501-255	Coupling, Elbow Hose
3	1	M508-554-01	Head, Corrosion Resistor
4	4	M321-501-256	Screw, Captive Washer Cap
5	1	M250-578-01	Resistor, Corrision
6	4	M321-501-257	Clamp, Hose
7	1	M321-501-258	Bracket, Filter
8	2	M321-501-259	Hose, Plain
9	2	M321-501-260	Bushing, Reducing Pipe
10	2	M321-501-09	Plug, Pipe

Dry Systems® Technologies

WATER INLET CONNECTION

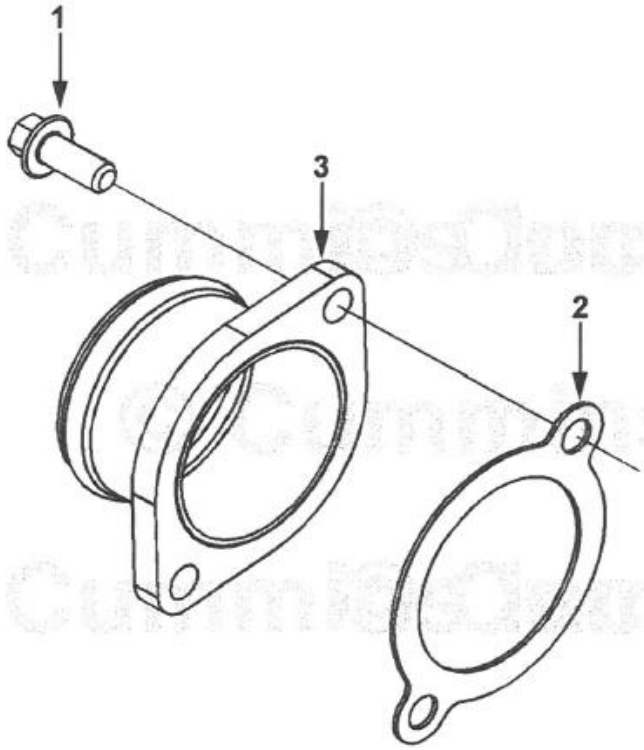

Item	Qty	Part Number	Description
1	2	M250-514-01	Screw, Hex Flange Head Cap
2	1	M321-501-261	Gasket, Connection
3	1	M321-501-262	Connection, Water Inlet

Dry Systems® Technologies

WATER OUTLET CONNECTION

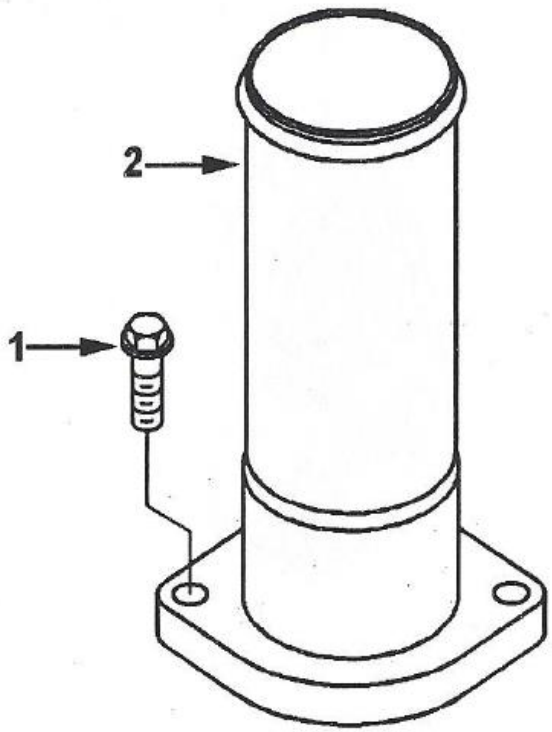

Item	Qty	Part Number	Description
1	2	M250-533-05	Screw, Hex Flange Head Cap
2	1	M321-501-263	Connection, Water Outlet (modified)

Dry Systems® Technologies

BELT TENSIONER

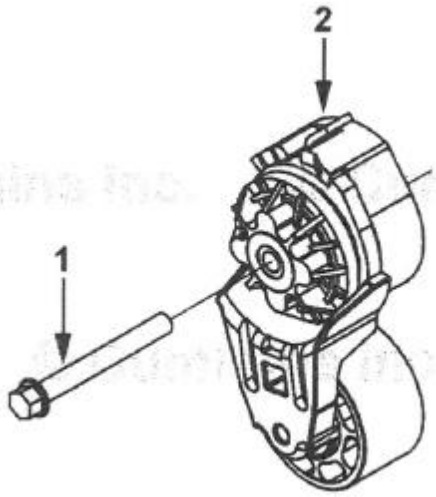

Item	Qty	Part Number	Description
1	1	M510-502-01	Screw, Hex Flange Head Cap
2	1	M505-561-01	Tensioner, Belt

WATER PUMP

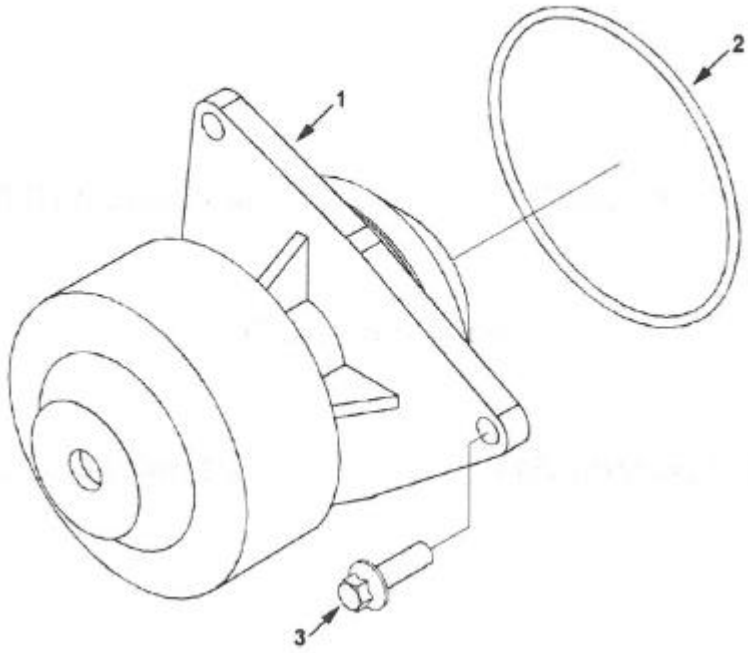

Item	Qty	Part Number	Description
	1	M509-505-01	Kit, Water Pump
1	1	(M321-501-265)	Pump, Water
2	1	M321-501-266	Seal, O-Ring
3	3	M321-501-267	Screw, Hex Flange Head Cap

Dry Systems® Technologies

WATER PUMP DRIVE BELT

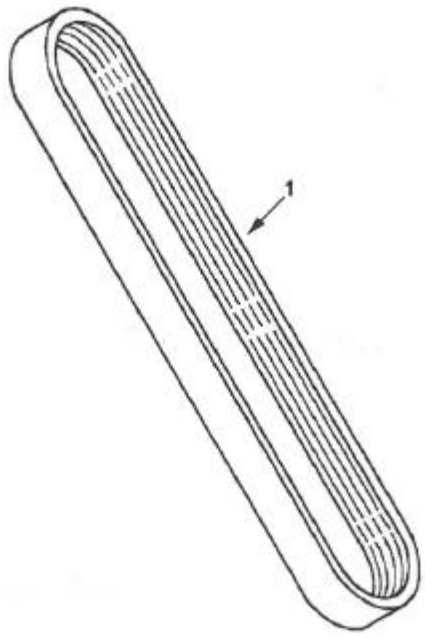

Item	Qty	Part Number	Description
1	1	M250-590-01	Belt, V Ribbed

Dry Systems® Technologies

LOWER ENGINE GASKET SET

Item	Qty	Part Number	Description
	1	**M321-501-268**	**Lower Engine Gasket Set**
	1	M321-501-269	Gasket, Gear Housing
	1	M321-501-270	Washer, Sealing
	1	M321-501-271	Seal, O-Ring
	6	M321-501-272	Nozzle, Piston Cooling
	1	M321-501-99	Seal, Rectangular Ring
	1	M250-615-01	Seal. O-Ring
	1	M321-501-273	Seal, Rectangular Ring
	1	M321-501-274	Gasket, Lube Oil Cooler Cover
	1	M250-617-01	Seal, Rectangular Ring
	1	M321-501-275	Gasket, Hydraulic Pump
	1	M321-501-276	Gasket, Gear Cover
	1	M321-501-277	Gasket, Gear Cover
	1	M509-580-01	Gasket, Oil Cooler Core
	1	M321-501-278	Gasket, Hudraulic Pump
	1	M321-501-279	Washer, Sealing
	12	M321-501-18	Nozzle, Piston Cooling
	1	M321-501-280	Gasket, Lube Oil Cooler Cover
	1	M321-501-135	Valve, Bypass
	1	M509-508-01	Gasket, Oil Pan
	1	M505-511-01	Gasket, Cover Plate
	1	M509-506-01	Gasket, Oil Suction Connection
	1	M321-501-281	Gasket, Rear Cover
	1	M321-501-282	Seal, O-Ring
	1	M321-501-283	Kit, Front seal Service (includes installation tool)
	1	M321-501-284	Kit, Crankshaft Seal

Item	Qty	Part Number	Description
	1	M321-501-37	Main Bearing Kits, Standard
	1	M321-501-161	Engine Piston Kit, Standard

Dry Systems® Technologies

SERVICE REPAIR KIT

UPPER ENGINE GASKETS

Item	Qty	Part Number	Description
	1	**M250-589-01**	**Upper Engine Gasket Set Kit**
	6	M250-530-01	Seal, Banjo Connector
	2	M250-531-01	Washer, Sealing
	1	M250-507-01	Seal, Rocker Lever Cover
	1	M250-218-01	Gasket, Turbocharger
	6	M250-214-01	Gasket, Copper Exhaust Manifold
	1	M250-506-01	Gasket, Cylinder Head
	1	M250-291-01	Gasket, Intake Manifold
	6	M250-527-01	Seal, O-Ring
	1	M250-508-01	Seal, Rectangular Ring
	1	M250-528-01	Seal, Rectangular Ring
	1	M250-529-01	Seal, Rectangular Ring

Part Index

Part Number	Description	Page No.
M90-371-14	Stud	62
M250-108-01	Cylinder Head, Modified	59
M250-109-21	Turbocharger, Assembly, Modified	62
M250-206-02	Tube, Compressor Air Inlet	18
M250-211-01	Bracket, Front Lifting	44
M250-214-01	Gasket, Exhaust Manifold	68
M250-214-01	Gasket, Exhaust Manifold	81
M250-215-18	Manifold, Exhaust	68
M250-218-01	Gasket, Turbocharger	81
M250-218-01	Gasket, Turbocharger	62
M250-290-01	Cover, Intake Manifold	43
M250-291-01	Gasket, Intake Manifold Cover	43
M250-291-01	Gasket, Intake Manifold Cover	81
M250-298-01	Washer, Sealing	70
M250-503-01	Screw, Hex Flange Head Cap	59
M250-505-02	Plug, Pipe	47
M250-505-03	Spacer, Mounting	47
M250-505-04	Elbow, Male Union	47
M250-505-05	Hose, Flexible	47
M250-505-06	Elbow, Male Adapter	47
M250-505-07	Head, Lub Oil Filter	47
M250-505-08	Bracket, Filter	47
M250-505-09	Seal, O Ring	47
M250-505-10	Cover, Filter Head	47
M250-505-11	Adapter, Filter Head	47
M250-505-12	Seal, O Ring	47
M250-505-13	Screw, Hex Flange Head Cap	47
M250-505-14	Screw, Hex Flange Head Cap	47
M250-505-15	Hose, Flexible	47
M250-506-01	Gasket, Cylinder Head	59
M250-506-01	Gasket, Cylinder Head	81
M250-507-01	Seal, Rocker Lever Cover	71
M250-507-01	Seal, Rocker Lever Cover	81
M250-508-01	Seal, Rectangular Ring	71
M250-508-01	Seal, Rectangular Ring	81
M250-514-01	Screw, Hex Flange Head Cap	74
M250-514-01	Screw, Hex Flange Head Cap	37
M250-517-01	Screw, Hex Flange Head Cap	37
M250-517-01	Screw, Hex Flange Head Cap	33
M250-519-01	Bracket, Mounting	37
M250-520-01	Bracket, Fuel Lines	33

Part Index

Part Number	Description	Page No.
M250-527-01	Seal, O Ring	71
M250-527-01	Seal, O Ring	81
M250-528-01	Seal, Rectangular Ring	26
M250-528-01	Seal, Rectangular Ring	81
M250-529-01	Seal, Rectangular Ring	26
M250-529-01	Seal, Rectangular Ring	81
M250-530-01	Seal, Banjo Connector	36
M250-530-01	Seal, Banjo Connector	81
M250-531-01	Washer, Sealing	36
M250-531-01	Washer, Sealing	81
M250-532-01	Kit, Extended Dipstick	49
M250-532-02	Tube, Oil Gauge	49
M250-532-03	Nut, Regular Hexagon	49
M250-532-04	Screw, Hex Flange Head Cap	49
M250-532-04	Screw, Hex Flange Head Cap	42
M250-532-05	Plug, Expansion	49
M250-532-06	Tube, Oil Gauge	49
M250-532-07	End, Oil Gauge Tube	49
M250-532-08	Brace, Tube	49
M250-532-09	Clamp, Spring Hose	49
M250-532-10	Dipstick	49
M250-533-02	Cap, Filler	51
M250-533-05	Screw, Hex Flange Head Cap	75
M250-543-01	Pump, Fuel Injector	33
M250-547-01	Screw, Hex Flange Head Cap	59
M250-553-01	Hose Assy, Turbo Oil Drain	70
M250-563-01	Tube, Fuel Supply	27
M250-574-01	Element, Lub Oil Filter	47
M250-575-01	Filter, Fuel Primary	26
M250-576-01	Filter, Fuel Secondary	26
M250-578-01	Resistor, Corrosion	72
M250-586-01	Injector	58
M250-589-01	Upper Engine Set Kit	81
M250-590-01	Belt, V Ribbed	78
M250-591-01	Compressor, Air	19
M250-591-02	Compressor, Air	19
M250-591-03	Gear, Accessory Drive	19
M250-591-04	Kit, Air Compressor Repair	19
M250-591-05	Kit, Rear Seal & Adpt.	19
M250-591-06	Kit, Gasket	19
M250-591-07	Adapter, Spline	19

Part Index

Part Number	Description	Page No.
M250-614-01	Pin, Timing	11
M250-615-01	Seal, O Ring	79
M250-615-01	Seal, O Ring	11
M250-616-01	Housing, Timing Pin	11
M250-617-01	Seal, Rectangular Ring	79
M250-617-01	Seal, Rectangular Ring	11
M250-619-01	Support, Fuel Pump	33
M250-622-01	Hose, Plain Upper	18
M250-622-02	Hose, Plain Lower	18
M250-623-01	Screw, Hex Flange Head Cap	24
M250-623-01	Screw, Hex Flange Head Cap	19
M321-501-01	Screw, Hex Flange Head Cap	2
M321-501-02	Pulley, Crankshaft	2
M321-501-03	Plug, Threaded	4
M321-501-03	Plug, Threaded	43
M321-501-03	Plug, Threaded	5
M321-501-03	Plug, Threaded	3
M321-501-04	Seal, O Ring	4
M321-501-04	Seal, O Ring	5
M321-501-04	Seal, O Ring	3
M321-501-04	Seal, O Ring	43
M321-501-05	Plug, Threaded	4
M321-501-05	Plug, Threaded	5
M321-501-05	Plug, Threaded	3
M321-501-06	Plug, Threaded	3
M321-501-07	Plug, Threaded	3
M321-501-08	Seal, O Ring	32
M321-501-08	Seal, O Ring	31
M321-501-08	Seal, O Ring	3
M321-501-09	Plug, Pipe	72
M321-501-09	Plug, Pipe	17
M321-501-09	Plug, Pipe	4
M321-501-10	Draincock	5
M321-501-11	Kit, Cylinder Liner	7
M321-501-11	Kit, Cylinder Liner	5
M321-501-12	Seal, Rectangular Ring	7
M321-501-12	Seal, Rectangular Ring	5
M321-501-13	Liner, Cylinder	7
M321-501-13	Liner, Cylinder	5
M321-501-14	Pin, Dowel	5
M321-501-15	Pin, Dowel	5

Part Index

Part Number	Description	Page No.
M321-501-16	Plug, Expansion	5
M321-501-17	Seal, O Ring	9
M321-501-17	Seal, O Ring	5
M321-501-18	Nozzle, Piston Cooling	79
M321-501-18	Nozzle, Piston Cooling	8
M321-501-18	Nozzle, Piston Cooling	5
M321-501-19	Block, Cylinder	5
M321-501-20	Plug, Expansion	5
M321-501-21	Plug, Expansion	5
M321-501-22	Plug, Expansion	5
M321-501-23	Plug, Expansion	5
M321-501-24	Bushing	5
M321-501-25	Screw, Hex Flange Head Cap	5
M321-501-26	Cap, Main Bearing	5
M321-501-27	Block, Cylinder	5
M321-501-28	Shim	7
M321-501-28	Shim	5
M321-501-29	Shim	7
M321-501-29	Shim	5
M321-501-30	Shim	7
M321-501-30	Shim	5
M321-501-31	Shim	7
M321-501-31	Shim	5
M321-501-32	Shim	7
M321-501-32	Shim	5
M321-501-33	Assembly TLA, Crankshaft	9
M321-501-34	Crankshaft, Engine	9
M321-501-35	Gear, Crankshaft	9
M321-501-36	Pin, Dowel	9
M321-501-37	Kit, PDC, Main Bearing, Standard	9
M321-501-37	Kit, PDC, Main Bearing, Standard	80
M321-501-38	Bearing, Main	9
M321-501-39	Bearing, Crankshaft Thrust	9
M321-501-40	Bearing, Main	9
M321-501-41	Tappet, Valve	10
M321-501-42	Screw, Round Head Cap	11
M321-501-43	Housing, Timing Pin	11
M321-501-44	Ring, Retaining	11
M321-501-45	Screw, Hex Flange Head Cap	11
M321-501-46	Housing, Gear	11
M321-501-47	Screw, Hex Flange Head Cap	11

Part Index

Part Number	Description	Page No.
M321-501-48	Gasket, Gear Housing	11
M321-501-49	Clip	12
M321-501-50	Screw, Hex Flange Head Cap	12
M321-501-50	Screw, Hex Flange Head Cap	44
M321-501-51	Clamp, Spring Hose	12
M321-501-52	Clip	12
M321-501-53	Tube, Breather	12
M321-501-54	Screw, Self Tapping Metal	28
M321-501-55	Hose, Plain	12
M321-501-56	Connection, Vent	12
M321-501-57	Seal, Rectangular Ring	12
M321-501-58	Clamp, Hose	12
M321-501-59	Gasket, Breather	12
M321-501-60	Hose, Plain	12
M321-501-61	Screw, Hex Flange Head Cap	12
M321-501-61	Screw, Hex Flange Head Cap	28
M321-501-62	Plate, Cover	12
M321-501-63	Connector Male	14
M321-501-64	Elbow, Male Adapter	14
M321-501-65	Tube, Cpr Water Inlet	14
M321-501-66	Tee, Plain Adapter	14
M321-501-67	Seal, O Ring	14
M321-501-68	Plug, Pipe	14
M321-501-69	Tee, Plain Adapter	14
M321-501-70	Tube, Cpr Water Outlet	14
M321-501-71	Elbow, Male Adapter	14
M321-501-72	Elbow, Male Adapter	14
M321-501-73	Union, Female Adapter	16
M321-501-74	Union, Female Adapter	16
M321-501-75	Seal, O Ring	16
M321-501-76	Hose, Flexible	19
M321-501-77	Screw, Hex Flange Head Cap	19
M321-501-78	Stud	19
M321-501-79	Spacer, Mounting	19
M321-501-80	Elbow, Plain Union	19
M321-501-81	Brace, Air Compressor	19
M321-501-82	Screw, Hex Flange Head Cap	21
M321-501-83	Damper, Vibration	21
M321-501-84	Screw, Hex Flange Head Cap	23
M321-501-85	Support, Front Engine	23
M321-501-86	Hub, Fan	24

Part Index

Part Number	Description	Page No.
M321-501-87	Support, Fan	24
M321-501-88	Washer, Sealing	25
M321-501-89	Plug, Threaded	25
M321-501-90	Plug, Threaded	25
M321-501-91	Plug, Pipe	62
M321-501-91	Plug, Pipe	25
M321-501-92	Nut, Regular Hexagon Jam	26
M321-501-93	Adapter, Filter Head	26
M321-501-94	Ball	26
M321-501-95	Adapter, Filter Head	26
M321-501-96	Head, Fuel Filter	26
M321-501-97	Cover, Rear	28
M321-501-98	Plug, Threaded	28
M321-501-99	Seal, Rectangular Ring	79
M321-501-99	Seal, Rectangular Ring	28
M321-501-100	Screw, Hex Flange ead Cap	28
M321-501-101	Plate, Cover	28
M321-501-102	Gasket, Rear Cover	28
M321-501-103	Rr Crankseal Serv Kit	28
M321-501-104	Bushing, Reducing Pipe	30
M321-501-105	Connector, Male	32
M321-501-105	Connector, Male	31
M321-501-106	Elbow, Male Adapter	32
M321-501-106	Elbow, Male Adapter	31
M321-501-107	Tee, Female Pipe	32
M321-501-107	Tee, Female Pipe	31
M321-501-108	Connector, Male	32
M321-501-108	Connector, Male	31
M321-501-109	Nut, Hexagon Flange	33
M321-501-110	Screw, Hex Flange Head Cap	33
M321-501-111	Screw, Hex Flange Head Cap	33
M321-501-112	Stud	33
M321-501-113	Screw, Hex Flange Head Cap	33
M321-501-114	Seal, O Ring	33
M321-501-115	Support, Fuel Pump	33
M321-501-116	Seal, Rectangular Ring	33
M321-501-117	Support, Fuel Pump	33
M321-501-118	Gear, Fuel Pump	33
M321-501-119	Screw, Hexagon Head Cap	35
M321-501-121	Carrier, Seal	41
M321-501-122	Nut, Lock	41

Part Index

Part Number	Description	Page No.
M321-501-123	Seal, O Ring	42
M321-501-124	Plug, Expansion	42
M321-501-125	Coupling, Plain Hose	42
M321-501-125	Coupling, Plain Hose	70
M321-501-126	Plug, Pipe	45
M321-501-126	Plug, Pipe	42
M321-501-127	Plate, Clamping	42
M321-501-128	Connection, Water Transfer	42
M321-501-129	Screw, Hex Flange Head Cap	43
M321-501-130	Plug, Pipe	45
M321-501-131	Plug, Pipe	45
M321-501-132	Plug, Threaded	45
M321-501-133	Plug, Threaded	45
M321-501-134	Seal, O Ring	45
M321-501-135	Valve, Bypass	79
M321-501-135	Valve, Bypass	45
M321-501-136	Seal, O Ring	45
M321-501-137	Valve, Bypass	45
M321-501-138	Screw, Studded Flange Cap	45
M321-501-139	Plunger, PRS Regulator	45
M321-501-140	Screw, Hex Flange Head Cap	45
M321-501-141	Spring, Compression	45
M321-501-142	Head, Lub Oil Filter	45
M321-501-143	Dowel, Ring	45
M321-501-144	Screw, Hex Flange Head Cap	45
M321-501-145	Head, Lub Oil Filter	45
M321-501-146	Cover, Lub Oil Cooler	45
M321-501-147	Gasket, Connection	45
M321-501-148	Pump, Lubricating Oil	50
M321-501-149	Screw, Hexagon Head Cap	50
M321-501-150	Tube, Oil Filler	51
M321-501-151	Screw, Hex Flange Head Cap	52
M321-501-152	Screw, Hex Flange Head Cap	52
M321-501-153	Nut, Hexagon Flange	52
M321-501-154	Screw, Hex Flange Head Cap	52
M321-501-155	Washer, Plain	52
M321-501-156	Spacer, Mounting	52
M321-501-157	Brace, Tube	52
M321-501-158	Plug, Threaded	52
M321-501-159	Plug, Threaded	52
M321-501-160	Oil Drain Plug/Right Side	52

Part Index

Part Number	Description	Page No.
M321-501-161	Kit, Engine Piston	55
M321-501-161	Kit, Engine Piston	80
M321-501-162	Set, Piston Ring	55
M321-501-163	Ring, Compression Piston	55
M321-501-164	Ring, Oil Piston	55
M321-501-165	Ring, Compression Piston	55
M321-501-166	Ring, Retaining	55
M321-501-167	Piston, Engine	55
M321-501-168	Rod, Engine Connecting	55
M321-501-169	Bushing	55
M321-501-170	Rod, Engine Connecting	55
M321-501-171	Bolt, Connecting Rod	55
M321-501-172	Nut, Connecting Rod	55
M321-501-173	Pin, Piston	55
M321-501-174	Bearing, Connecting Rod	55
M321-501-175	Gear, Camshaft	57
M321-501-176	Screw, Hexagon Head Cap	57
M321-501-177	Key, Plain Woodruff	57
M321-501-178	Camshaft	57
M321-501-179	Support, Camshaft Thrust	57
M321-501-180	Collet, Valve	59
M321-501-181	Valve, Exhaust	59
M321-501-182	Valve, Intake	59
M321-501-183	Seal, Valve Stem	59
M321-501-184	Insert, Valve	59
M321-501-185	Plug, Expansion	59
M321-501-186	Plug, Expansion	59
M321-501-187	Plug, Expansion	59
M321-501-188	Guide, Valve Stem	59
M321-501-189	Insert, Valve	59
M321-501-190	Retainer, Valve Spring	59
M321-501-191	Spring, Valve	59
M321-501-192	Plug, Pipe	61
M321-501-221	Brace, Tube	63
M321-501-222	Tube, Injector Fuel Supply	63
M321-501-223	Tube, Injector Fuel Supply	63
M321-501-224	Tube, Injector Fuel Supply	63
M321-501-225	Tube, Injector Fuel Supply	63
M321-501-226	Brace, Tube	63
M321-501-227	Plug, Pipe	5
M321-501-228	Screw, Twelve Point Cap	64

Part Index

Part Number	Description	Page No.
M321-501-229	Clamp, Retaining	64
M321-501-230	Rod, Push	64
M321-501-231	Support, Rocker Lever	64
M321-501-232	Lever, Rocker	64
M321-501-233	Lever, Rocker	64
M321-501-234	Nut, Heavy Hexagon	64
M321-501-235	Screw, Rkr Lever Adjusting	64
M321-501-236	Insert, Rocker Lever	64
M321-501-237	Washer, Spring	64
M321-501-238	Shaft, Rocker Lever	64
M321-501-239	Shaft, Rocker Lever	64
M321-501-240	Rivet	64
M321-501-241	Washer, Plain	64
M321-501-242	Manifold, Oil	64
M321-501-243	Ring, Retaining	64
M321-501-245	Valve, Check	66
M321-501-246	Valve, Check	66
M321-501-247	Coupling, Plain Hose	66
M321-501-248	Plug, Bypass	69
M321-501-249	Plug, Threaded	69
M321-501-250	Coupling, Plain Hose	69
M321-501-251	Seal, O Ring	70
M321-501-252	Connector, Female	70
M321-501-253	Seal, O Ring	70
M321-501-254	Tube, Tur Oil Drain	70
M321-501-255	Coupling, Elbow Hose	72
M321-501-256	Screw, Captive Washer Cap	72
M321-501-257	Clamp, Hose	72
M321-501-258	Bracket, Filter	72
M321-501-259	Hose, Plain	72
M321-501-260	Bushing, Reducing Pipe	72
M321-501-261	Gasket, Connection	74
M321-501-262	Connection, Water Inlet	74
M321-501-263	Connection, Water Outlet	75
M321-501-265	Pump, Water	77
M321-501-266	Seal, O Ring	77
M321-501-267	Screw, Hex Flange Head Cap	77
M321-501-268	Kit, Service Repair, Lower Engine Gaskets	79
M321-501-269	Gasket, Gear Housing	79
M321-501-270	Washer, Sealing	79
M321-501-271	Seal, O Ring	79

Part Index

Part Number	Description	Page No.
M321-501-272	Nozzle, Piston Cooling	79
M321-501-273	Seal, Rectangular Ring	79
M321-501-274	Gasket, Lub Oil Clr Cover	79
M321-501-275	Gasket, Hydraulic Pump	79
M321-501-276	Gasket, Gear Cover	79
M321-501-277	Gasket, Gear Cover	79
M321-501-278	Gasket, Hydraulic Pump	79
M321-501-279	Washer, Sealing	79
M321-501-280	Gasket, Lub Oil Clr Cover	79
M321-501-281	Gasket, Rear Cover	79
M321-501-282	Seal, O Ring	79
M321-501-283	Kit, Front Seal Service	79
M321-501-284	Kit, Crankshaft Seal	79
M321-501-285	Screw, Hex Head Cap	29
M321-501-288	Flywheel	38
M321-501-289	Flywheel	38
M502-575-01	Support, Fan	24
M502-598-01	Adapter, Angle Drive	67
M503-520-01	Hub, Tac Drive Coupling	67
M503-528-01	Pulley, Fan	24
M504-517-01	Thermostat	22
M505-510-01	Pump, Fuel Transfer	35
M505-511-01	Gasket, Cover Plate	79
M505-511-01	Gasket, Cover Plate	35
M505-527-01	Manifold, Fuel	36
M505-554-01	Seal, Rectangular Ring	67
M505-555-01	Seal, Rectangular Ring	67
M505-556-01	Adapter, Tac Takeoff Drive	67
M505-561-01	Tensioner, Belt	76
M506-533-01	Screw, Banjo Connector	25
M506-534-01	Connector, Male	25
M506-535-01	Washer, Sealing	35
M506-535-01	Washer, Sealing	27
M506-535-01	Washer, Sealing	25
M506-536-01	Connector, Banjo	25
M506-537-01	Tube, Air Fuel Control	25
M506-555-01	Pulley, Accessory Drive	54
M506-565-01	Washer, Plain	67
M506-566-01	Screw, Hexagon Head Cap	67
M506-567-01	Cap, Filler	71
M506-568-01	Screw, Hex Flange Head Cap	71

Part Index

Part Number	Description	Page No.
M506-569-01	Cover, Valve	71
M506-570-01	Gasket, Hydraulic Pump	19
M507-560-01	Screw, Hex Flange Head Cap	68
M507-592-03	Tube, Fuel Drain	36
M507-594-01	Valve, Check	36
M508-509-01	Housing, Flywheel	29
M508-510-03	Gear, Flywheel	38
M508-515-01	Seal, Injector	58
M508-543-01	Hose, Flexible	32
M508-543-01	Hose, Flexible	31
M508-544-01	Screw, Banjo Connector	32
M508-544-01	Screw, Banjo Connector	31
M508-545-01	Washer, Sealing	32
M508-545-01	Washer, Sealing	31
M508-551-09	Screw, Hex Flange Head Cap	33
M508-551-18	Valve, Pressure Relief	45
M508-553-01	Valve, Shutoff	72
M508-554-01	Head, Corrosion Resistor	72
M508-593-01	Tube, Injector Fuel Supply	63
M508-597-01	Screw, Banjo Connector	35
M508-599-01	Hose, Flexible	70
M508-612-01	Tube, Fuel Supply	35
M509-505-01	Kit, Water Pump	77
M509-506-01	Gasket, Oil Suc Connection	79
M509-506-01	Gasket, Oil Suc Connection	52
M509-507-01	Connection, Oil Suction	52
M509-508-01	Gasket, Oil Pan	79
M509-508-01	Gasket, Oil Pan	52
M509-509-01	Pan, Oil	52
M509-510-01	Plug, O Ring	28
M509-511-01	Seal, O Ring	28
M509-512-01	Clip	36
M509-513-01	Screw, Banjo Connector	36
M509-514-01	Washer, Sealing	36
M509-514-01	Washer, Sealing	27
M509-515-01	Screw, Hex Flange Head Cap	36
M509-516-01	Screw, Hex Flange Head Cap	58
M509-517-01	Clamp, Injector	58
M509-518-01	Screw, Banjo Connector	27
M509-531-01	Nut, Hexagon Flange	19
M509-538-01	Screw, Hex Flange Head Cap	52

Part Index

Part Number	Description	Page No.
M509-545-01	Nut, Hexagon Flange	33
M509-555-01	Connector, Male	32
M509-555-01	Connector, Male	31
M509-556-01	Head, Fuel Filter	26
M509-563-01	Seal, O Ring	69
M509-571-01	Screw, Captive Washer Cap	27
M509-572-01	Screw, Banjo Connector	27
M509-576-01	Screw, Captive Washer Cap	39
M509-579-01	Core, Cooler	45
M509-580-01	Gasket, Oil Cooler Core	79
M509-580-01	Gasket, Oil Cooler Core	45
M509-581-01	Gasket, Lub Oil Clr Cover	45
M509-583-01	Bearing, Ball	24
M508-558-01	Seal	14
M509-589-01	Valve, Overflow	36
M510-502-01	Screw, Hex Flange Head Cap	76
M510-513-01	Tube, Injector Fuel Supply	63
M510-542-02	Tube, Turbo Coolant Supply	70
M510-542-03	Hose, Elbow	70
M510-542-04	Hose, Plain	70
M510-548-01	Screw, Studded Flange Cap	40
M510-549-01	Cover, Gear	41
M510-550-01	Screw, Hex Flange Head Cap	41
M510-551-01	Seal, Oil	41
M510-552-01	Screw, Twelve Point Cap	41
M510-555-01	Tube, Injector Fuel Supply	63
M510-576-01	Ring, Retaining	24
M510-577-01	Screw, Hexagon Head Cap	24
M510-578-01	Retainer, Fan Hub	24
M510-596-01	Seal, Oil	28
M600-109-01	Nut, Hexagon Flane	62
M600-730-01	Clamp, Hose	18
M600-730-01	Clamp, Hose	70